MP MASTER
MA34028

MODEL 1600B
SYNTHESIZER DRIVER
CHAPTERS 1 through

SYSTRON DONNER

INSTRUCTION MANUAL

MODEL 1600B
SYNTHESIZER DRIVER

CHAPTERS 1 through 6

Copyright © 1977 Systron-Donner Corporation

SYSTRON DONNER CORPORATION

CONCORD INSTRUMENT DIVISION
10 Systron Drive • Concord, California 94518 • U.S.A.
Tel: (415) 676-5000 • TWX: 910-481-9479 • Cable: SYSTRONDONNER
FSCM No. 52542

Printed in U.S.A.

Digitized by the Internet Archive
in 2025

https://archive.org/details/manualsplus_09939

SYSTRON DONNER
CORPORATION

WARRANTY

Systron-Donner instruments are warranted during a period of one year from date of shipment to original purchaser to be free from defects in material and workmanship. This warranty does not apply to vacuum tubes, except as these are warranted by tube manufacturers. The liability of Seller under this warranty is limited to replacing or repairing any instrument or component thereof which is returned by Buyer, at his expense, during such period and which has not been subjected to misuse, neglect, improper installation, repair, alteration, or accident. Seller shall have the right to final determination as to the existence and cause of a defect. In no event shall Seller be liable for collateral or consequential damages. This warranty is in lieu of any other warranty, expressed, implied, or statutory; and no agreement extending or modifying it will be binding upon Seller unless in writing and signed by a duly authorized officer.

RECEIVING INSPECTION

Every Systron-Donner instrument is carefully inspected and is in perfect working order at the time of shipment. Each instrument should be checked as soon as received. If the unit is damaged in any way, or fails to operate, a claim should immediately be filed with the transportation company.

REPAIRS

Whenever a Systron-Donner instrument requires service, the nearest Systron-Donner representative should be contacted; all representatives will provide immediate service or arrange factory returns when necessary.

Please specify both model and serial number in all correspondence concerning Systron-Donner instruments. Address all inquiries on operation or applications to your nearest sales representative; or, Sales Manager, Concord Instrument Division, Systron-Donner Corporation, 10 Systron Drive, Concord, California 94518.

TABLE OF CONTENTS

		PAGE
CHAPTER 1 - GENERAL INFORMATION		
1.1	Introduction	1-1
1.2	Specifications	1-1
CHAPTER 2 - INSTALLATION		
2.1	Introduction	2-1
2.2	Receiving Inspection	2-1
2.3	Reshipment	2-1
2.4	Power Requirements	2-1
2.5	Location Site	2-2
2.6	Initial Turn-On	2-2
CHAPTER 3 - OPERATION		
3.1	Introduction	3-1
3.2	Controls, Connectors and Indicators	3-1
3.3	Local System Operation	3-3
3.3.1	Reference Standard	3-5
3.4	Remote Operation	3-5
3.4.1	Parallel Inputs	3-5
3.4.2	Serial Inputs	3-5
3.4.3	IEEE-488 Interface Bus	3-7
3.5	Option 09 Multiplier Computer	3-7
CHAPTER 4 - THEORY OF OPERATION		
4.1	Introduction	4-1
4.2	General Information	4-1
4.3	Circuit Descriptions	4-2
4.3.1	A1, Option 02 A1, Thumbwheel Switch Board	4-4
4.3.2	Option 02 & 09 A2, A5 VCO ÷N	4-4
4.3.3	Option 02 & 09 A3, VCO ÷N	4-9
4.3.4	Option 02 & 09 A4, VCO SUM 100 kHz	4-9
4.3.5	Option 02 & 09 A5,A7,A9, VCO ÷N	4-10
4.3.6	Option 02 & 09 A6,A8,A10 VCO SUM	4-11
4.3.7	A11, VCO ÷N	4-11
4.3.8	A12, 10 MHz Reference	4-11
4.3.9	Option 06 A13, IEEE-488 Program (2)	4-12
4.3.10	A13, Remote Frequency Selector	4-16
4.3.11	A14, Frequency Control	4-18
4.3.12	Option 09 A15, Multiplier Computer Calculator	4-19
4.3.13	A16, D to A Converter	4-20
4.3.14	Option 09 A17, Multiplier Computer Logic	4-20
4.3.15	Option 09 A18, Multiplier Computer D/A Converter	4-27
4.3.16	A19, Remote	4-28
4.3.17	Option 06, IEEE-488 Program (1)	4-28
4.3.18	A20, Lock Indicator	4-29
4.3.19	A21, 100 MHz Reference	4-30

PAGE

CHAPTER 4 - THEORY OF OPERATION (Cont'd)

4.3.20 A22A1, IF Phase Detector 4-30
4.3.21 A23A1, VCO Buffer 4-30
4.3.22 A24, Power Supply 4-30
4.3.23 A25A1, Oscillator Buffer 4-31

CHAPTER 5 - MAINTENANCE AND CALIBRATION

5.1 Introduction 5-1
5.1.1 Access to Major Assemblies 5-1
5.2 Test Equipment 5-3
5.3 Performance Check 5-5
5.4 Preventive Maintenance 5-5
5.4.1 Loop Voltage Check 5-5
5.5 Calibration 5-5
5.5.1 Oscillator Check 5-6
5.5.2 Phase Lock Adjustments 5-8
5.5.3 Oscillator Amplitude Tests 5-12
5.5.4 Lock Indicator Tests 5-12
5.5.5 A16, Converter Tests 5-12
5.5.6 Option 09 A18, Multiplier Computer D/A Tests 5-12
5.5.7 J3, Interconnect Tests 5-12
5.6 Repair 5-13
5.6.1 Troubleshooting 5-13
5.6.2 Circuit Board Repair 5-13
5.6.3 Major Component Data 5-14

CHAPTER 6 - PARTS LISTS

6.1 Introduction 6-1
6.2 Part Ordering Information 6-1
6.3 Parts Lists 6-1

CHAPTER 7 - DRAWINGS

7.1 Introduction 7-1

LIST OF FIGURES

Figure 1-1 Model 1600B and Accessories 1-0
2.1 Power Line Voltage Selection, P101,P102 2-3
2.2 Multiband Cable Connections 2-4
2.3 Standard System Cable Connections 2-5
2.4 Multiplexer System Cable Connections 2-6
3.1 Front Panel, Model 1600B 3-2
3.2 Rear Panel, Model 1600B 3-2
4.1 Microwave Synthesizer, Octave Configuration 4-3
4.2 Synthesizer System Multiband Configuration 4-4

PAGE

LIST OF FIGURES (Cont'd)

Figure	4.3	General Block Diagram (Sheet 1 of 2)	4-5
	4.3	General Block Diagram (Sheet 2 of 2)	4-6
	4.4	General Block Diagram, Option 09	4-7
	4.5	Timing Diagram IEEE-488 1975 Interface (Sheet 1 of 2)	4-13
	4.5	Timing Diagram IEEE-488 1975 Interface (Sheet 2 of 2)	4-14
	4.6	Flip Flop States	4-15
	4.7	Option 05, Timing Diagram Serial Programming	4-17
	4.8	Option 09, A15 & A17 Calculator & Logic Boards	4-21
	4.9	Option 09, Timing Diagram (Sheet 1 of 4)	4-22
	4.9	Option 09, Timing Diagram (Sheet 2 of 4)	4-23
	4.9	Option 09, Timing Diagram (Sheet 3 of 4)	4-24
	4.9	Option 09, Timing Diagram (Sheet 4 of 4)	4-25
	5.1	Flow Chart for Chapter 5	5-0
	5.2	Righthand Gusset Removal	5-1
	5.3	Top View Component Location	5-4
	5.4	Time Base Temperature Stability Check	5-7
	5.5	Fault Isolation Diagram	5-15

LIST OF TABLES

Table	1.1	Specifications	1-1
	3.1	Front Panel, Model 1600B	3-1
	3.2	Rear Panel, Model 1600B	3-1
	3.3	Interconnect Pin Assignments, J3	3-4
	3.4	Remote Programming Pin Assignments	3-6
	3.5	Option 06, IEEE-488 Programming Data	3-8
	3.6	IEEE-488 Connector Contact Assignments	3-9
	3.7	Interconnect Pin Assignments, J3	3-10
	4.1	Thumbwheel Strobe Order	4-18
	4.2	VCO ÷N and D/A Strobe Order	4-19
	4.3	Calculator Sequencing	4-26
	4.4	Computed Divisors	4-27
	4.5	Power Supply Voltages	4-31
	5.1	Major Assemblies	5-2
	5.2	Recommended Test Equipment	5-3
	5.3	Voltage Check	5-5
	5.4	J3, Pin Check	5-13
	5.5	Component Description Page Location	5-16
	6.1	Parts Lists Location	6-1
	6.2	Manufacturer's Code-to-Name Index	6-2
	7.1	List of Schematic & Component Location Diagrams	7-1

CAUTIONS AND WARNINGS

Hazardous voltages are exposed when the covers are removed from the instrument. Power should be removed from the instrument chassis before attempting repairs. Only qualified service personnel should attempt such repairs.

MODEL 1600B SYNTHESIZER DRIVER

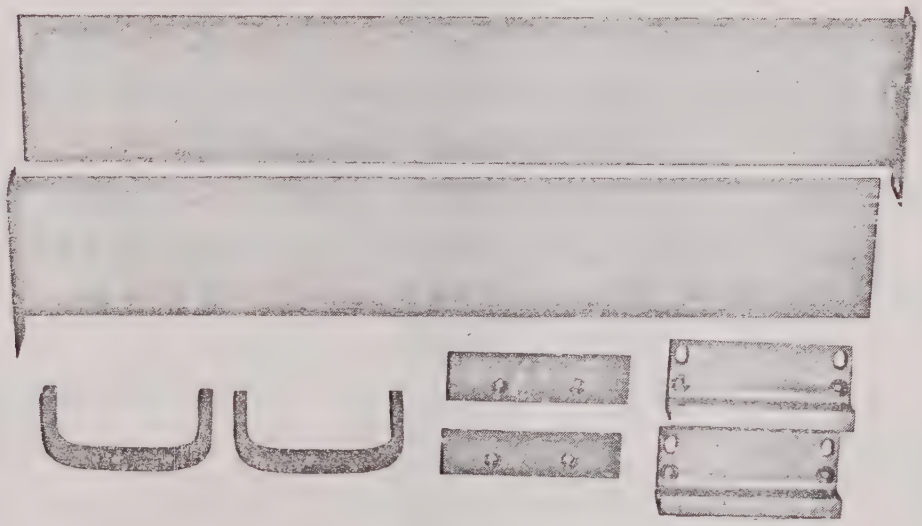

RACK MOUNT

POWER CORD

50 PIN CONNECTOR

FIGURE 1.1 MODEL 1600B AND ACCESSORIES

CHAPTER 1
GENERAL INFORMATION

1.1 INTRODUCTION

The Model 1600B Synthesizer Driver is one of the two chassis necessary in Systron-Donner's indirect means of microwave frequency synthesis.*

The main function of the Synthesizer Driver is to generate three signals which will be used by the Microwave Unit to synthesize a microwave frequency. These three signals are: (1) a programmable DC voltage; (2) a stable 100 MHz reference; and (3) a synthesized frequency between 11 MHz and 20.9999999 MHz.

Included in this chapter are the specifications for the standard Model 1600B. A list of supplied accessories with part numbers are enumerated. Special cables may be ordered for a specific installation. Standard options are given in Section 1.4 and are factory installable.

1.2 SPECIFICATIONS

The specifications for the Model 1600B Synthesizer Driver are listed in Table 1.1.

TABLE 1.1 SPECIFICATIONS

FREQUENCY SELECTION:	Made locally from front panel thumbwheel switches or remotely programmable. Tuning resolution to 1 kHz is standard. Resolution to 1 Hz is available optionally. A front panel Local/Remote frequency selection switch is standard.
INTERNAL REFERENCE STANDARD:	±3 parts in 10^9 after warmup.
REFERENCE INPUT:	As selected by a rear panel switch, the internal frequency reference may be replaced by an external 5 MHz or 1 MHz reference source.
PROGRAMMING:	Remote frequency selection is BCD programmable with TTL positive true logic. Input connector is Amphenol 57-40500 (rear panel). Parallel programming is standard with byte serial programming optional at no additional charge. IEEE-488 Interface Bus is available at additional cost.
POWER:	115/230 volts, 50-60 Hz. Approx 60 watts.
OPERATING TEMPERATURE:	0 to 40°C.
DIMENSIONS:	89 cm Height, 48.3 cm Width, 48.3 cm Depth. (3.5 in Height, 19.0 in Width, 19.0 in Depth.)

*Patented

TABLE 1.1 SPECIFICATIONS (CONTD)

SUPPLIED ACCESSORIES	
Line Cord:	8'3 X 18 NED plug IEC Fem. Belden BR-1736 S-D P/N 102407, Qty 1.
Rectangular Connector:	50 pin Male plug w/hood. Amphenol 57-30500, S-D P/N 101157, Qty 1.
Rack Mount:	Two D handles and slides, S-D P/N 03998604, Qty 1.
Extender Board:	56 pin extender card, S-D P/N 05598401.
OPTIONS	A number of options are available for specially configuring the Model 1600B for a particular application. The standard options include:
Option 02:	1 Hz RESOLUTION: provides 3 additional digits of resolution on the Model 1600B Synthesizer Driver to increase tuning resolution to 1 Hz.
Option 05:	REMOTE SERIAL PROGRAMMING: allows either 4 or 8 bit/byte serial entry programming at Model 1600B Driver Unit. This is a no charge option in place of the standard parallel BCD programming.
Option 06:	IEEE-488 INTERFACE BUS: allows complete programming of the Model 1600B.
Option 09:	MULTIPLIER COMPUTER FOR MODEL 1600B: Required when the Model 1600B Synthesizer Driver is used with Model 1601B and 1614B Wideband Synthesizer. Allows desired output frequency from the Model 1614B to be entered directly either locally or remotely at the Model 1600B. This option essentially eliminates the need to manually compute the proper input frequency for the multiplier. Consult factory for definition or required computation.

CHAPTER 2
INSTALLATION

2.1 INTRODUCTION

This chapter outlines the procedures for initial inspection and installation of the Model 1600B Synthesizer Driver. Instruction for reshipment are included should the Model 1600B require return to the Systron-Donner Corporation.

2.2 RECEIVING INSPECTION

Prior to accepting the unit from the shipper, inspect the condition of the shipping container for any indication of freight damage. Any sign of such damage must be noted by both the shipper and receiver and should be reported to the insurance investigator.

Immediately following the removal of the unit from the shipping carton, inspect for possible physical damage incurred during shipment. Check surface for scratches or dents and note the condition of knobs and connectors. Should any damage be noted, notify your nearest Systron-Donner representative—DO NOT USE THE UNIT UNTIL INSTRUCTED TO DO SO BY THE REPRESENTATIVE.

2.3 RESHIPMENT

If possible, use the original packing materials to reship the instrument. Your Systron-Donner field office can provide materials similar to those used for the original factory packaging.

GENERAL PACKING INSTRUCTION

1) Wrap the instrument in heavy paper or plastic prior to placing into the shipping container.

2) Use a strong carton or wooden box to house the instrument.

3) Use ample packing material on all sides and protect the front panel with cardboard strips.

4) Seal the package with strong tape or metal bands and mark "DELICATE INSTRUMENT" on all sides.

5) All correspondence should refer to full instrument nomenclature (model and serial number).

2.4 POWER REQUIREMENTS

The Model 1600B Synthesizer Driver is equipped with a detachable three-conductor power cord that automatically grounds the unit (chassis ground) when a matching power receptacle is employed. An adapter which provides a chassis ground should be used whenever the power cord is mated to a two-terminal outlet.

The Model 1600B operates from 100, 115, 200, 215, 230, 240 Vrms at 50 to 60 Hz and draws approximately 60 watts of power. Two internal molex connectors J101 and J102 are used to change the operating voltage.

NOTE

The Model 1600B is shipped with a 1.5 A 3AG Slo-Blo Fuse (115V operation). Should 230V operation be employed, the standard 1.5 A 3AG fuse should be replaced with a .75 A 3AG Slo-Blo fuse to adequately protect the instrument. The internal oscillator, as supplied, uses a .25 A 3AG Slo-Blo fuse and should be replaced with a .125 A 3AG fuse for 230V operation.

2.5 LOCATION SITE

The rear panel must remain unobstructed while the Model 1600B is operating to allow cooling and access to the rear panel connectors. In addition, the top cover should also be left unobstructed to allow convection cooling. The chassis will normally run warm to the touch.

2.6 INITIAL TURN-ON

This procedure verifies that no major damage has occurred to the instrument during transit, and that the instrument is operative. (See figures 2.2, 2.3, and 2.4 for system cable connections.)

NOTE

Prior to performing the initial turn-on procedure, become familiar with the instrument's controls as described in Section 3.2 Controls, Connectors, and Indicators.

1) Check the power jumper plugs, P101 and P102 for the proper line voltage and connect the system cables as shown in Figures 2.2 through 2.4.

2) Move the ON-OFF switch to the ON position. The white POWER light should illuminate.

3) Warm-up time will include the lock-cycle which ends with the turning on of the green LOCK light on the front panel. This lamp indicates the output is phase locked and coherent with external 1 or 5 MHz standard, or the internal 1 MHz oscillator.

100 VAC LINE
P/N 05566401

115 VAC LINE
P/N 05566402

200 VAC LINE
P/N 05566403

215 VAC LINE
P/N 05566404

225 VAC LINE
P/N 05566405

230 VAC LINE
P/N 05566406

240 VAC LINE
P/N 05566407

FIGURE 2.1 POWER LINE VOLTAGE SELECTION, P101, P102

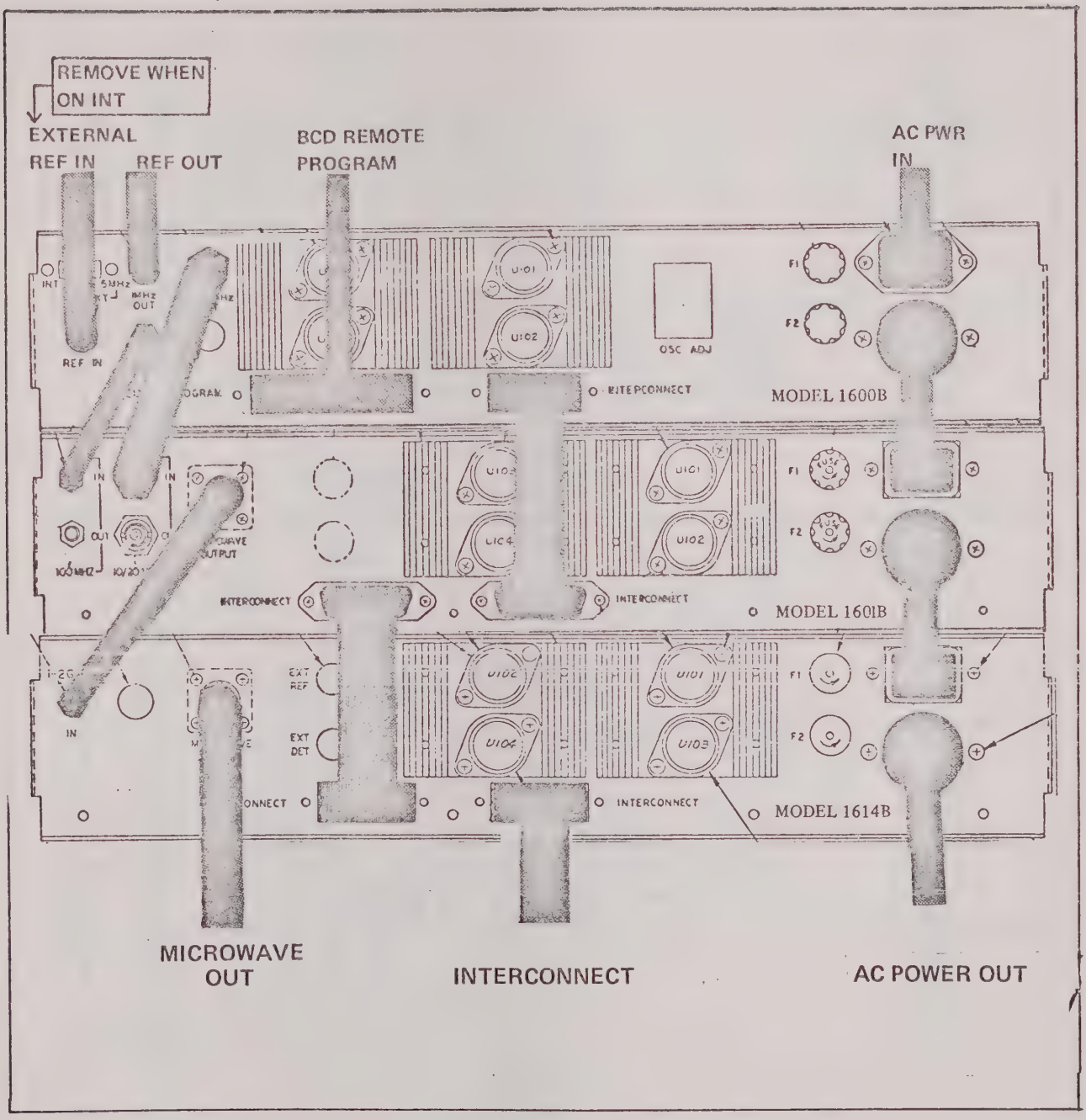

FIGURE 2.2 MULTIBAND CABLE CONNECTIONS

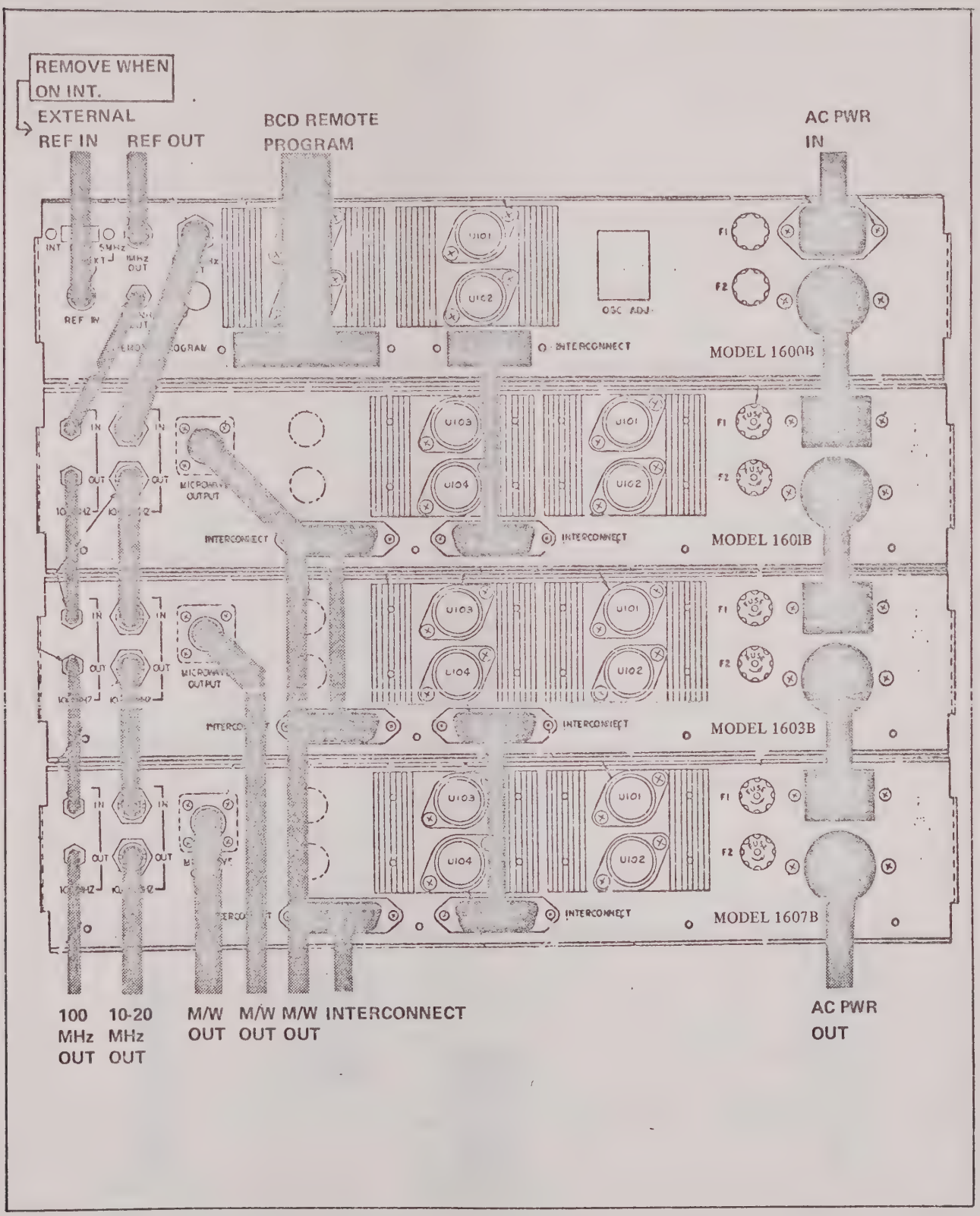

FIGURE 2.3 STANDARD SYSTEM CABLE CONNECTIONS

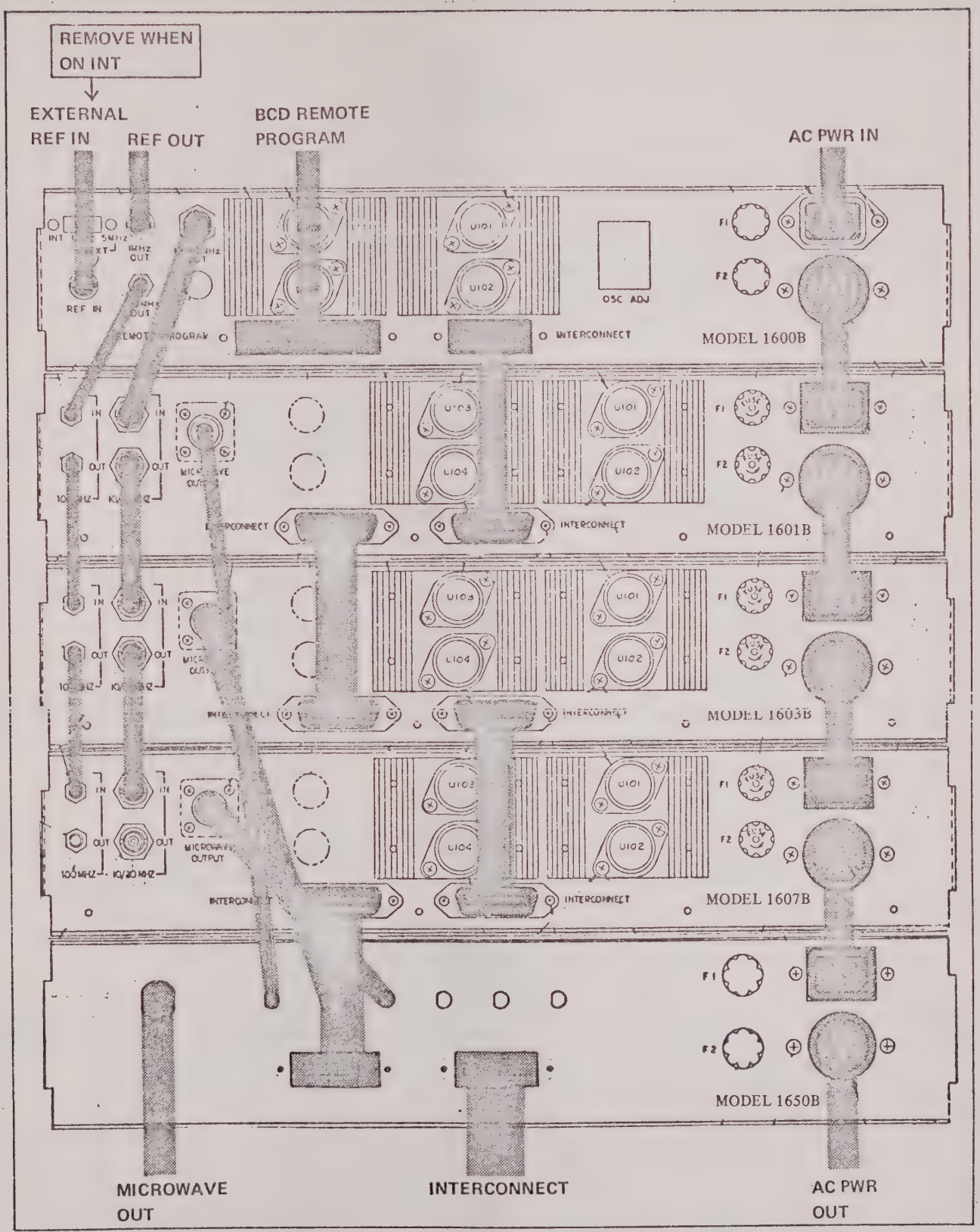

FIGURE 2.4 MULTIPLEXER SYSTEM CABLE CONNECTIONS

CHAPTER 3
OPERATION

3.1 INTRODUCTION

This chapter describes the Model 1600B Synthesizer Driver operating procedures. Included is a table of the instruments controls, connectors, and indicators followed by a brief section delineating both the manual and remote modes of operation. Option 09 Multiplier Computer operation is given in Section 3.5.

3.2 CONTROLS, CONNECTORS, AND INDICATORS

The various controls, connectors, and indicators of the Model 1600B are described in Table 3.1 Front Panel and Table 3.2 Rear Panel. Figures 3.1 and 3.2 provide indexed locations of each item in the tables.

TABLE 3.1 FRONT PANEL, MODEL 1600B
(See Figure 3.1)

INDEX	NAME	FUNCTION
1	ON-OFF (toggle switch)	Turns on and off the ac power to the unit.
2	POWER (white light)	This lamp, when on, indicates the unit is drawing ac line current.
3	LOCK (green light)	This lamp goes out when any one of the internal phase-locked loops are unlocked.
4	FREQUENCY (thumbwheel switch)	This switch sets the output frequency in 1 kHz increments. (1 Hz with option 02 installed).
5	PROGRAM, LOCAL/REMOTE (toggle switch)	This switch selects either thumbwheel (LOCAL) or remote (REMOTE) control of frequency output.

TABLE 3.2 REAR PANEL, MODEL 1600B
(See Figure 3.2)

INDEX	NAME	FUNCTION
1	INT/EXT (slide switch)	The input reference frequency is selected with this switch. On INT the unit will use the internal crystal oscillator. The center position is for an external 1 MHz signal and the 5 MHz position for a 5 MHz external input.
2	REF IN (BNC connector)	The external 1 or 5 MHz standard is coupled to this BNC. With the INT/EXT switch in the 1 or 5 MHz position.

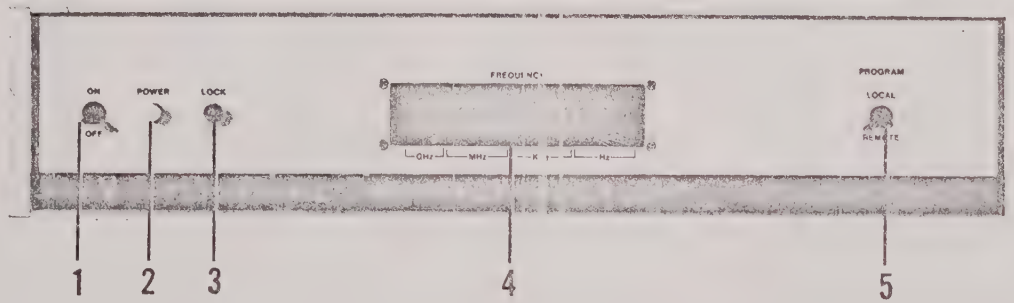

FIGURE 3.1 FRONT PANEL, MODEL 1600B

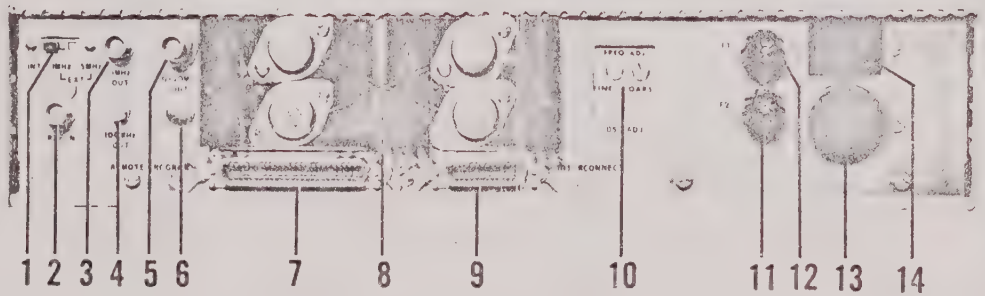

FIGURE 3.2 REAR PANEL, MODEL 1600B

TABLE 3.2 REAR PANEL, MODEL 1600B (CONTD)
(See Figure 3.2)

INDEX	NAME	FUNCTION
3	1 MHz OUT (BNC connector)	Supplies an output of the 1 MHz reference.
4	100 MHz OUT (SMA connector)	This supplies a 2V p-p 100 MHz reference output signal.
5	10-20 MHz OUT (BNC connector)	This connector supplies the "Reference B" output signal selected by the front panel thumbwheel switches. The output range is 10-20 MHz in 100 Hz steps or .1 Hz step with option 02.
6	ACCESSORY (Plug)	
7	REMOTE PROGRAM (50 pin connector)	This Amphenol, 50 pin, 5040500 connector allows remote programming of the front panel FREQUENCY thumbwheel switch.
8	POWER SUPPLY REGULATORS (with heat sink)	Four power supply regulators with associated heat sinks are mounted in this location for cooling. Care should be taken not to obstruct the air flow around the heat sinks.
9	INTERCONNECT	This Amphenol, 24 pin, type 50-40240 connector supplies both analog and digital control signals to the microwave frequency synthesizer unit.
10	OSC ADJ (access hold)	The access is for adjustment of the internal oscillator reference. FINE for fine adjust and COARSE for coarse adjustment.
11	F2 (fuse holder)	This a a line fuse holder for ac power delivered to an internal oscillator.
12	F1 (fuse holder)	This is the line fuse holder for the ac power supplied to the unit.
13	Convenience Outlet (socket)	This is an unfused female terminal, ac power, convenience socket provided on the rear panel for coupling power to other microwave frequency synthesizer units etc.
14	Power Receptacle (socket)	The ac power cord is inserted into this receptacle.

3.3 LOCAL SYSTEM OPERATION

The Model 1600B will stand alone as a 10 to 20 MHz synthesizer with its additional fixed outputs of 100 MHz and 1 MHz. However, the Model 1600B normally functions as the driver in a 16XXB Microwave Frequency Synthesizer system. In addition to supplying 100 MHz and the 11-20.9999999 MHz synthesized frequency to the microwave unit, analog and BCD data are also supplied via a rear panel mounted 24 pin Amphenol

connector. Three interconnecting cables are supplied to match the SMA, BNC, and 24 pin connectors to the Model 1600B and 16XXB rear panels. Pin assignments and functions for the J3, 24 pin connector are listed in Table 3.3 J3 is an Amphenol 24 pin, 57-40240 connector (S-D P/N 101177) which mates with Amphenol 24 pin 57-30240 connector (S-D P/N 101166).

With the 1600B properly coupled to the 16XXB as in Figure 2.2, turn on the POWER switches on the Driver and Microwave chassis and allow 15 minutes of warm-up. After warm-up and a frequency is selected within the range of the Microwave unit, the green LOCK Light should be on to indicate that all the phase locked loops are locked. The selected output microwave frequency is available on the type N connector on the rear panel of the microwave unit. When operated alone, the Model 1600B Driver will be locked when the green LOCK lamp is on. No INTERCONNECT cable should be attached to the 1600B when operating alone.

TABLE 3.3 INTERCONNECT PIN ASSIGNMENTS, J3

PIN	BIT	FUNCTION
1		GROUND
2		0.0 to 9.9 Vdc in .1V steps (A16-16)
3		NOT CONNECTED
4	$\overline{1}$	BCD for 10 GHz Digit (A13-B,A14-20)
5		NOT CONNECTED
6		NOT CONNECTED
7		NOT CONNECTED
8	8	BCD for 1 GHz digit (A16-17)
9	4	BCD for 1 GHz digit (A16-18)
10	8	BCD for 100 MHz digit (A16-4)
11	4	BCD for 100 MHz digit (A16-6)
12		NOT CONNECTED
13		NOT CONNECTED
14		NOT CONNECTED
15		Lock Indicator (0 or +14V) (A20-U)
16		NOT CONNECTED
17		NOT CONNECTED
18		NOT CONNECTED
19		NOT CONNECTED
20	2	BCD for 1 GHz digit (A16-20)
21	1	BCD for 1 GHz digit (A16-21)
22	2	BCD for 100 MHz digit (A16-5)
23	1	BCD for 100 MHz digit (A16-3)
24		GROUND

3.3.1 Reference Standard

To operate on the internal standard of the Model 1600B select INT with the rear panel INT/EXT switch. In this operating condition no cable should be coupled to the REF IN BNC connector. This will prevent extraneous noise from being injected on to the time base circuitry.

If a 1 MHz external standard is to be used as the reference, set the INT/EXT switch to EXT 1 MHz and couple the 1 MHz Standard to the REF IN BNC connector. The input impedance is 1 kΩ with a minimum voltage of 1.5V and maximum input voltage is 10 Vrms. The 1 MHz is available as an output on the 1 MHz OUT BNC. This supplies 2.4 V at 40 mA max.

If a 5 MHz external standard is to be used as the reference, set the INT/EXT switch to EXT 5 MHz and couple the 5 MHz Standard to the REF IN BNC connector. A minimum 2 Vrms signal is needed with a maximum level of 10 Vrms.

If a 10 MHz external standard is to be used as the reference, set the INT/EXT switch to EXT 5 MHz, change the jumpers on the A12, 10 MHz Reference Board by removing W1 and installing W2 and W3, and couple the 10 MHz standard to the REF IN BNC.

3.4 REMOTE OPERATION

The Model 1600B Synthesizer Driver may be remote programmed for frequency control by straight parallel entry (up to 41 lines), with or without storage of the input data, or by 4 bit serial entry. In both programming modes data is entered on connector J4 counted on the rear panel. J4 is an Amphenol 50 pin connector, 57-40500 (S-D P/N 101156) which mates with Amphenol 57-30500 (S-D P/N 101157).

Logic "0" or LOW is 0 to +.09 Vdc.
Logic "1" or HIGH is +2 to +5 Vdc.

3.4.1 Parallel Inputs

Parallel frequency selection requires that all digits in the frequency number be presented simultaneously in BCD format before the STROBE line is used to control the storage of the data. With the strobe low (logical "0") the control will follow the data. Taking the strobe high (logical "1") will store the data present just prior to the strobe going high. Internal data strobe signals are at a 100 kHz rate (10 µs for each digit). Thus any input data must be left unchanged for at least 110 µs. Programming lines are listed in Table 3.4. All callouts are for standard parallel operation except for the * items which are additional lines used in the serial mode of operation.

3.4.2 Serial Inputs (Option 05)

To program the Model 1600B in the serial mode, the jumpers on the A13 remote board must be in the specified locations for serial operation. Each digit is presented serially, four bits at a time together with a corresponding address. The * items in Table 3.4 are used in the serial mode of operation. Each digit may be entered in any order as long as it is entered in the proper time window. The 10^{10} digit must be presented continuously during remote serial operation.

TABLE 3.4 REMOTE PROGRAMMING PIN ASSIGNMENTS

DIGIT	BIT/ACTION	J4, PIN#	A13, PIN #
10^9 * (1 GHz)	1	27 (FOR SERIAL ENTRY)	J
	2	26 (FOR SERIAL ENTRY)	13
	4	2 (FOR SERIAL ENTRY)	Y
	8	1 (FOR SERIAL ENTRY)	26
10^8 (100 MHz) OPTION 02 ONLY	1	29	8
	2	28	P
	4	4	21
	8	3	DD
10^7 (10 MHz) OPTION 02 ONLY	1	31	H
	2	30	R
	4	6	X
	8	5	27
10^6 (1 MHz)	1	33	7
	2	32	14
	4	8	20
	8	7	EE
10^5 (100 kHz)	1	35	5
	2	34	11
	4	10	V
	8	9	24
10^4 (10 kHz)	1	37	E
	2	36	M
	4	12	18
	8	11	BB
10^3 (1 kHz)	1	39	6
	2	38	N
	4	14	W
	8	13	25
10^2 (100 Hz)	1	41	F
	2	40	12
	4	16	19
	8	15	CC
10^1 (10 Hz)	1	43	9
	2	42	10
	4	18	22
	8	17	23
10^0 (1 Hz)	1	45	K
	2	44	L
	4	20	Z
	8	19	AA
10^{10}*(10 GHz)	1	21	28
Lock Indicator	Output indication is +5V when locked, or .6V when not locked.	49	A20, Pin 20

TABLE 3.4 REMOTE PROGRAMMING PIN ASSIGNMENTS (CONTD)

DIGIT	BIT/ACTION	J4, PIN#	A13, PIN#
Strobe	Ground to enter data	46	A14, Pin 11
Ground		25	Ground on LOCAL/REMOT REMOTE PROGRAM switch
Ground		50	3
Data Ready*		24	A14, Pin U and A13, Pin D
Address*	1	22	A14, Pin A
	2	23	A14, Pin B
	4	47	A14, Pin C
	8	48	A14, Pin D
	DIGIT ADDRESS		
	LSD 10^0 0000_2		
	10^1 0001_2		
	10^2 0010_2		
	10^3 0011_2		
	10^4 0100_2		
	10^5 0101_2		
	10^6 0110_2		
	10^7 0111_2		
	10^8 1000_2		
	MSD 10^9 1001_2		
	10^{10} Must be present while all digits are entered		

*Used for serial entry

3.4.3 IEEE-488 Interface Bus (Option 06)

This option allows the Model 1600B to be remotely programmed using the IEEE-488 Interface Bus. Table 3.5 lists the Program Codes for entering control commands to the Model 1600B. Contact assignments of the cable connector and the device connector are as shown in Table 3.6.

3.5 OPTION 09 MULTIPLIER COMPUTER

When the Option 09 Multiplier Computer is installed in a standard Model 1600B Synthesizer Driver, the output of a Model 1614B may be directly selected without the need to calculate the proper driver setting.

TABLE 3.5 OPTION 06 IEEE-488 PROGRAMMING DATA

Character	DIO7	DIO6	DIO5	DIO4	DIO3	DIO2	DIO1	Description
<	0	1	1	1	1	0	0	Start program string
@	1	0	0	0	0	0	0	Next numeric data to be stored in Digit 1 (LSD) interim register
0 - 9	0	1	1	X	X	X	X	Numeric data Digit 1
A	1	0	0	0	0	0	1	Next numeric data to be stored in Digit 2 interim register
0 - 9	0	1	1	X	X	X	X	Numeric data Digit 2
B	1	0	0	0	0	1	0	Next numeric data to be stored in Digit 3 interim register
0 - 9	0	1	1	X	X	X	X	Numeric data Digit 3
C	1	0	0	0	0	1	1	Next numeric data to be stored in Digit 4 interim register
0 - 9	0	1	1	X	X	X	X	Numeric data Digit 4
D	1	0	0	0	1	0	0	Next numeric data to be stored in Digit 5 interim register
0 - 9	0	1	1	X	X	X	X	Numeric data Digit 5
E	1	0	0	0	1	0	1	Next numeric data to be stored in Digit 6 interim register
0 - 9	0	1	1	X	X	X	X	Numeric data Digit 6
F	1	0	0	0	1	1	0	Next numeric data to be stored in Digit 7 interim register
0 - 9	0	1	1	X	X	X	X	Numeric data Digit 7
G	1	0	0	0	1	1	1	Next numeric data to be stored in Digit 8 interim register
0 - 9	0	1	1	X	X	X	X	Numeric data Digit 8
H	1	0	0	1	0	0	0	Next numeric data to be stored in Digit 9 interim register
0 - 9	0	1	1	X	X	X	X	Numeric data Digit 9
I	1	0	0	1	0	0	1	Next numeric data to be stored in Digit 10 interim register
0 - 9	0	1	1	X	X	X	X	Numeric data Digit 10
J	1	0	0	1	0	1	0	Next numeric data to be stored in Digit 11 (MSD) interim reg.
0 - 1	0	1	1	0	0	0	X	Numeric data MSD digit 11
>	0	1	1	1	1	1	0	End program string

Subsets

SH0, AH1, T0, TE0, L1, LE0, SR0, RL2, PP0, DC0, DT0, C0

Sample Program Sequence:

< @4 A3 B2 C1 D0 E5 F6 G7 H8 I2 J1 > will program 12, 876, 501, 234 Hz. Note that the address numeric pairs may occur in any sequence.

Address - 710 1-2 GHZ

PROGRAMMABLE LAST DIGIT = 100 HZ

TABLE 3.6 IEEE CONNECTOR CONTACT ASSIGNMENTS

CONTACT	SIGNAL LINE	CONTACT	SIGNAL LINE
1	DIO 1	13	DIO 5
2	DIO 2	14	DIO 6
3	DIO 3	15	DIO 7
4	DIO 4	16	DIO 8
5	EOI	17	REN
6	DAV	18	Gnd.(6)
7	NRFD	19	Gnd.(7)
8	NDAC	20	Gnd.(8)
9	IFC	21	Gnd.(9)
10	SRQ	22	Gnd.(10)
11	ATN	23	Gnd.(11)
12	SHIELD	24	Gnd.LOGIC

NOTE: Gnd, (*n*) refers to the signal ground return of the referenced contact.

This option consists of rewiring the standard Model 1600B chassis to accommodate the 09 option and adding the following three circuit cards: A18, Multiplier Computer D/A Converter; A15, Multiplier Computer Calculator; and A17, Multiplier Computer Logic.

The additional circuitry computes from the selected frequency the necessary quotient and multiplier for the Model 1614B to produce the output frequency. The Model 1601B generates the multiplicand. For example, the frequency 11,864,300,100 Hz is to be generated.

N	
11,864,300,100 Hz	is dialed up or remotely programmed on the Model 1600B.
1,186,430,010	is the dividend seen by Computer Calculator in the Model 1600B.
6	is the divisor = $\frac{2N+3+(-1)^N}{4}$
0197738335	is the quotient.
18,738,335.0 Hz	is the 10-20 MHz Output Model 1600B.
1.90 Vdc	is the D/A output to Model 1601B.
11.86 Vdc	is the D/A output to Model 1614B.
118	is the output to Model 1614B in BCD.

The Model 1600B Interconnect, J3 Table 3.6 shows the pin assignments and their functions.

TABLE 3.7 INTERCONNECT PIN ASSIGNMENTS, J3

PIN	BIT	FUNCTION
1		GROUND
2		0.0 to 9.9 Vdc in .1V steps (A16-16)
3		NOT CONNECTED
4	$\overline{1}$	BCD for 10 GHz digit (A14-20,A13-B, A14-7,A18-11)
5		0.00 to 8.91 Vdc (A18-Y)
6		NOT CONNECTED
7		NOT CONNECTED
8	8	BCD for 1 GHz digit (A18-13)
9	4	BCD for 1 GHz digit (A18-Z)
10	8	BCD for 100 MHz digit (A18-V)
11	4	BCD for 100 MHz digit (A18-U)
12		NOT CONNECTED
13		NOT CONNECTED
14		NOT CONNECTED
15		Lock Indicator (0 or +14V) (A20-U)
16		NOT CONNECTED
17		NOT CONNECTED
18		Low to Activate Relay in Model 1614B (A18-2)
19		NOT CONNECTED
20	2	BCD for 1 GHz digit (A18-X)
21	1	BCD for 1 GHz digit (A18-W)
22	2	BCD for 100 MHz digit (A18-T)
23	1	BCD for 100 MHz digit (A18-R)
24		GROUND

The only adjustments required in the Option 09 are found on the A16 Multiplier Computer D/A Converter board. To adjust this board, dial up a frequency less than 10 GHz and greater than 1 GHz. Adjust A16-R11 so that the output on pin A16-Y tracks the input dialed in. Now dial up 10.10 GHz and adjust A16-R12 for 10.10 Vdc output.

CHAPTER 4
THEORY OF OPERATION

4.1 INTRODUCTION

This chapter contains the general theory of operation of the Model 1600B Synthesizer Driver, as well as, detailed circuit description of the "A" numbered assemblies. Reference to the appropriate drawing in Chapter 7 is listed as an aid to understanding the description. Options 02, 05, and 09 are described together with the standard Model 1600B. Each board or assembly description title will indicate which is optional or which is standard.

4.2 GENERAL INFORMATION

The indirect means employed in this system[1] to synthesize microwave frequencies can be broken up into two basic areas as shown in Figure 4.1. The splitting of the system into two separate chassis physically separates these two areas. A second indirect system is used with the Multiband Synthesizer shown in Figure 4.2. Here, the two chassis indirect synthesizer system drives a multiplier unit, Model 1614B, with the option 09 Multiplier Computer installed in the 1600B.

Chapter 4 of the Model 16XXB Microwave Frequency Synthesizer manual describes the microwave chassis. Figure 4.3, sheets 1 and 2 gives a general block diagram for the Model 1600B with option 02. Figure 4.4 is a general block of the option 09 in the 1600B.

The Model 1600B Synthesizer Driver generates three signals used by the Microwave Unit to synthesize a microwave frequency: a programmable DC voltage, a stable 100 MHz reference, and a synthesized frequency between 11 and 21 MHz.

DC voltages are produced in response to an external command, either locally or remotely programmed. These voltages are directly related to the desired final output frequency. For example, a programmed frequency of 8 GHz will produce a precise voltage of 8 volts. Because oscillator tuning linearity of ±0.1% or better is possible, this voltage may be used to pretune the oscillators in the Microwave Unit to within 10 MHz.

A second Driver Unit output - the 100 MHz reference - is derived from a fifth overtone crystal oscillator, and lock-stabilized by an internal or external high stability reference. Phase lock stabilization is accomplished by a servo loop with a response boundary of 100 Hz. Within 100 Hz of either side of the 100 MHz signal the displayed spectral characteristics are those of the high stability reference standare. Beyond this envelope the 100 MHz oscillator spectral characteristics are displayed.

The third signal produced by the driver chassis is a synthesized frequency between 11 MHz and 21 MHz. A frequency resolution of 1 Hz is possible; the resolution being increased or decreased by adding or subtracting ÷N and SUM boards. The purity of this signal is a function of the characteristic of the reference standard as well as the servo loop transfer function of the 11 to 21 MHz oscillators.

[1]Patented

The reference used to create the 11 to 21 MHz signal is a crystal oscillator operating in its fundamental mode of 10 MHz. To stabilize the oscillator, a phase-reference servo loop is used. The 10 MHz signal is divided by 10 and by 100 to obtain 1 MHz and 100 kHz. These two frequencies are now used in programmable ÷N phase-locked loops. N is settable from 9 to 18 if the 1 MHz reference is used and from 9.9 to 19.8 if the 100 kHz reference is used. Both oscillators are then able to cover an octave. These oscillaotrs are LC varactor controlled and, because they are referenced to the original 10 MHz signal within the control bandwidth of the phase-locked loop, they exhibit the same spectral characteristics. The loop transfer function cutoff frequency is from 3 to 5 kHz. The spectrum, 5 kHz either side of these LC oscillators, is then characteristic of the 10 MHz signal. At worst case the degradation of the obsolute spectral characteristic is 6 dB. This is when the oscillators are at their upper frequency - almost 10 MHz doubled.

Because the 9 to 18 MHz oscillators are switched each time a new frequency is programmed, the type and frequency of the loop transfer function are important in determining the switching characteristics at microwave frequencies. Along with the digital ÷N circuits, the phase detectors are also digital. Besides being able to phase discriminate, the digital detector goes into a frequency discriminate mode if phase lock is not a condition of the loop. With this feature, pretune and search circuits are not necessary to acquire lock. Once programmed to a new frequency, the detector can switch discriminator modes within 1 period of the reference frequency 10 µs worst case. However, the main controlling factor is loop response. With the transfer function of the loop exhibiting a frequency response to typically 5 kHz, there are no other restraints to limit the oscillator from slewing from one frequency to any other in 1 ms.

Another LC varactor tuned oscillator slewed -1 to 21 MHz is also used. This is labeled a summing oscillator. With this phase locked loop the transfer function cutoff frequency is also in the range between 3 and 5 kHz. ÷N and SUM VCOs can be cascaded to eventually tune the 11 to 21 MHz range with resolution to 0.1 Hz. In this case, resolution can be increased or decreased by adding or subtracting ÷N and SUM VOC assemblies; and, with a large number of loops chained together, there are no large ambiguities when changing frequency, regardless of the size of change. Because of the fast digital detector switching from phase to frequency discrimator mode, there are essentially no periods of unlock.

4.3 CIRCUIT DESCRIPTIONS

The following descriptions of how the Model 1600B Synthesizer Driver circuits operate are listed "A" numbered sequence. Physical location of the assemblies in the chassis can be accomplished by using the Test Assembly page . Electrical connection of the assembly to the rest of the unit is described by the Wiring Interconnect Schematic page . Reference to the General Block Diagram page and the schematic in Chapter 7 listed in the description title will aid in following the discussion of the circuit.

If the description and schematic apply to more than one assembly, the "A" numbers will be grouped together.

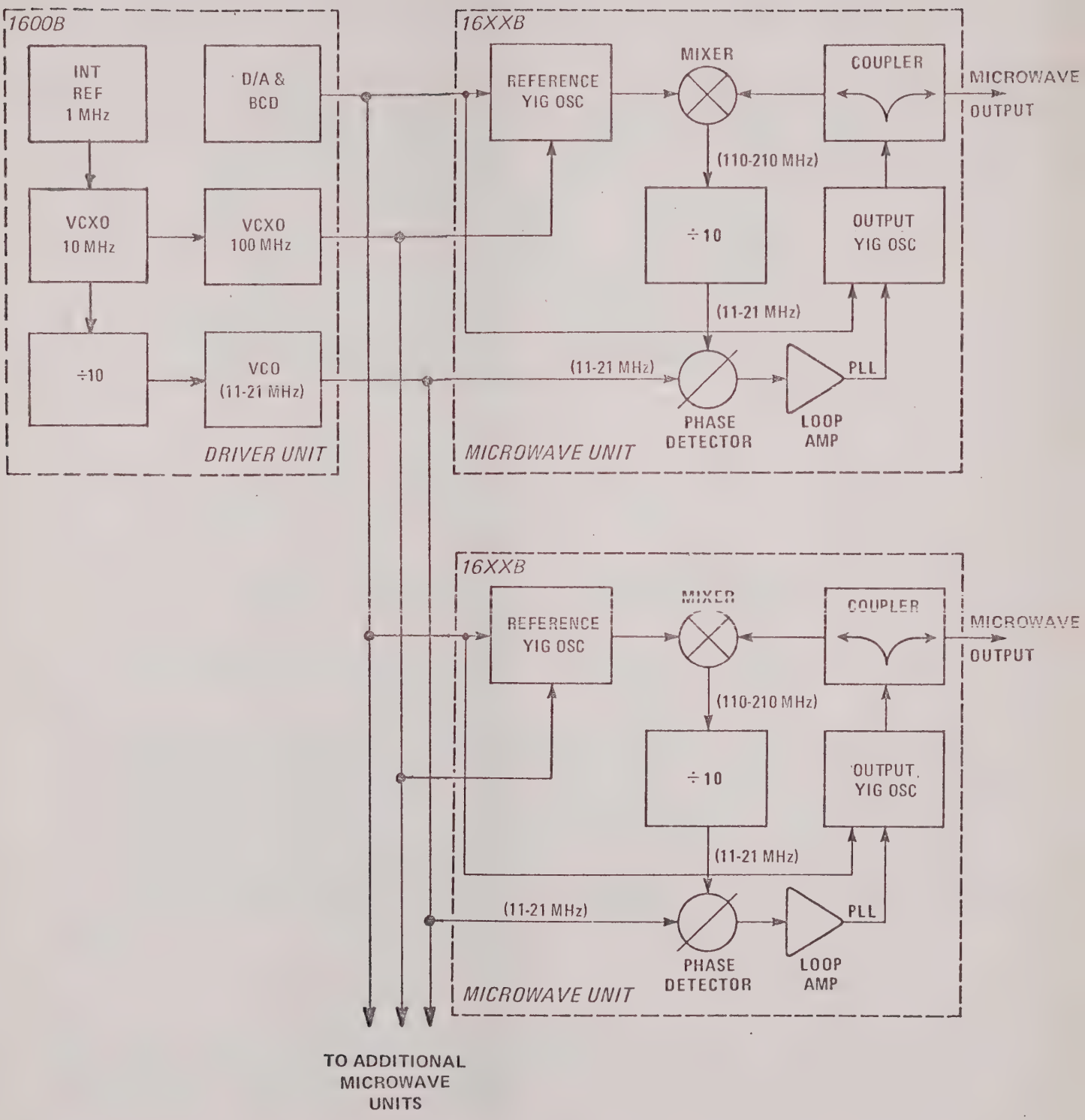

FIGURE 4.1 MICROWAVE SYNTHESIZER, OCTAVE CONFIGURATION

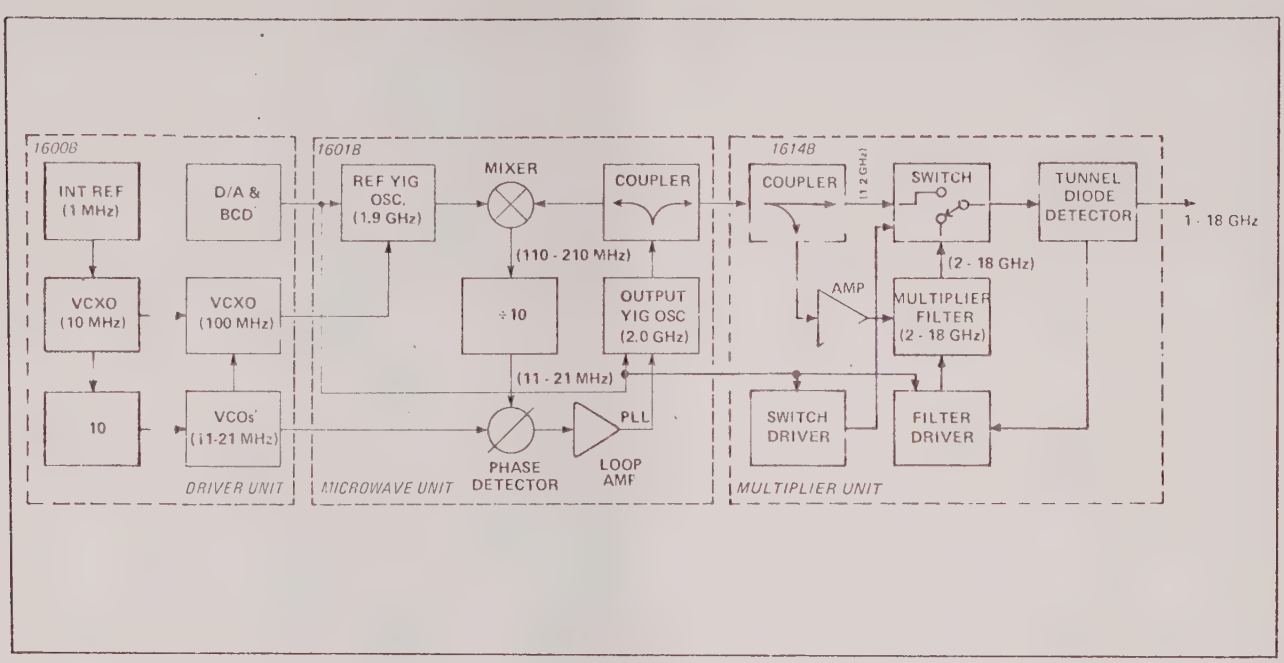

FIGURE 4.2 SYNTHESIZER SYSTEM MULTIBAND CONFIGURATION

4.3.1 A1, Option 02 A1, Thumbwheel Switch Board (page #7-05314601, page #7-05314602, and page #7-05314603)

This board provides mechanical mounting of the thumbwheel switches and electrical connection between these switches and the pc edge connector, XA1. Each thumbwheel switch is Binary coded with a BCD 1-2-4-8 output. For a particular frequency dialed up, each thumbwheel digit is continually strobed, pulsing pins 7,H,6,F,5,E,4,D,3, and C high at 100 kHz rate and in the sequency listed. The code for each digit is ORed by diodes CR1 through CR40 with pins A,1,B, and 2 carrying the corresponding 1,2,4, and 8 codes. The non-strobed 10 GHz thumbwheel switch produces an inverted 0 or 1 BCD code out on pin 9 and 8 with pin J permanently wired to ground. Option 02 adds the 100 Hz, 10 Hz, and 1 Hz thumbwheels. Option 09 adds the 100 Hz thumbwheel.

4.3.2 Option 02 & 09 A2, A5 VCO ÷N 10-19.9 MHz (page #7-05310804)

This shielded pc board is in the A2 position when the 1 Hz resolution Option 02 is installed. In the standard unit it occupies the A5 position. Only the A2 position, with inputs from the 1 Hz and 10 Hz digits, will be described since the operation of this circuit is identical when the board is in the A5 position.

The 10 Hz and 1 Hz strobed BCD information from either the A1, Thumbwheel Switches or the A13 Remote Board appears on pins H,J,M, and N, and on pins B,C,E, and F respectively. U5 and U1 are four bit bistable latches which temporarily store the

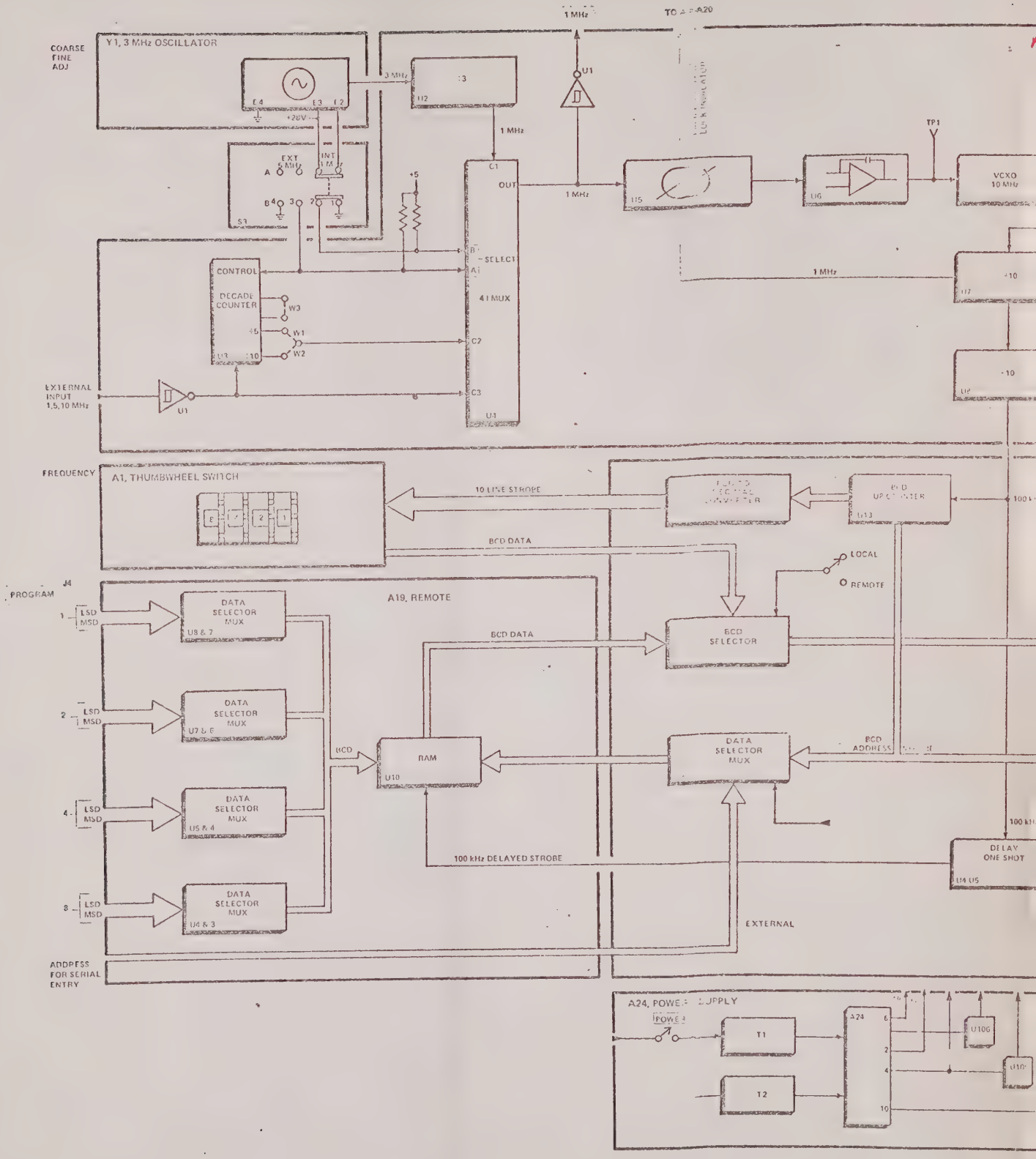

COARSE FINE ADJ
Y1, 3 MHz OSCILLATOR
E4
E3
E2
+28V
3 MHz
U2
1 MHz
U1
EXT 5 MHz
INT 1 M
S3
+5
C1
OUT
1 MHz
U5
U6
TP1
VCXO 10 MHz
SELECT
4 I MUX
CONTROL
DECADE COUNTER
W3
W1
W2
U3
C2
C3
U4
1 MHz
U7
EXTERNAL INPUT 1,5,10 MHz
U1
FREQUENCY
A1, THUMBWHEEL SWITCH
10 LINE STROBE
BCD DATA
U13
LOCAL
REMOTE
PROGRAM
J4
A19, REMOTE
LSD
MSD
DATA SELECTOR MUX
U8 & 7
U7 & 6
U5 & 4
U4 & 3
BCD DATA
BCD SELECTOR
BCD
RAM
U10
DATA SELECTOR MUX
BCD ADDRESS
100 kHz DELAYED STROBE
DELAY ONE SHOT
U4 U5
EXTERNAL
ADDRESS FOR SERIAL ENTRY
A24, POWER SUPPLY
POWER
T1
T2
A24
U106

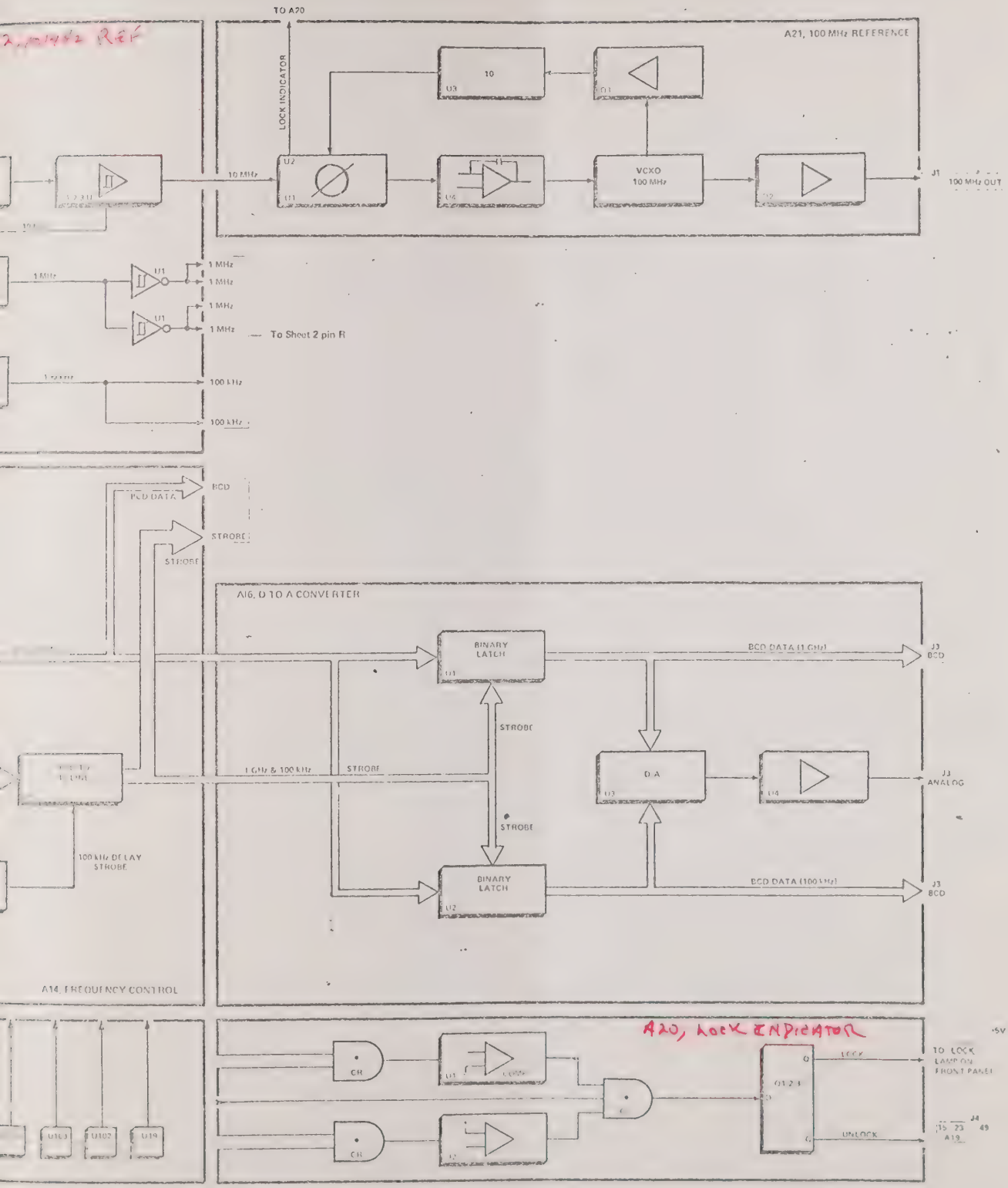

FIGURE 4.3
GENERAL BLOCK DIAGRAM
(Sheet 1 of 2)

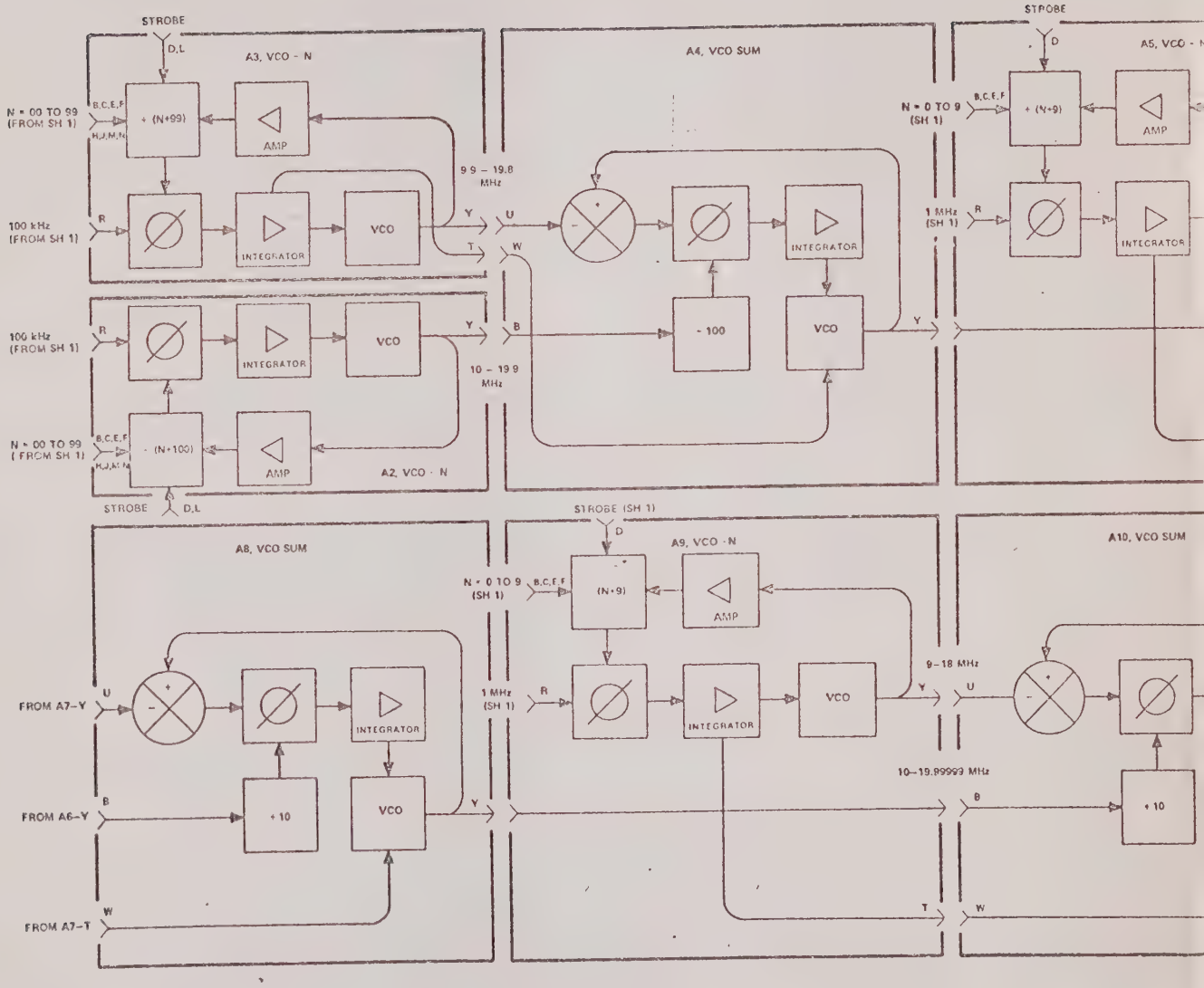
STROBE
D,L
A3, VCO - N
N = 00 TO 99
(FROM SH 1)
B,C,E,F
H,J,M,N
+ (N+99)
AMP
100 kHz
(FROM SH 1)
R
INTEGRATOR
VCO
Y
T
9.9 – 19.8
MHz
U
W
A4, VCO SUM
100 kHz
(FROM SH 1)
R
INTEGRATOR
VCO
Y
B
10 – 19.9
MHz
- 100
INTEGRATOR
VCO
Y
N = 00 TO 99
(FROM SH 1)
B,C,E,F
H,J,M,N
- (N+100)
AMP
A2, VCO - N
STROBE
D,L
STROBE
D
A5, VCO - N
N = 0 TO 9
(SH 1)
B,C,E,F
+ (N+9)
AMP
1 MHz
(SH 1)
R
INTEGRATOR
A8, VCO SUM
FROM A7–Y
U
INTEGRATOR
FROM A6–Y
B
+ 10
VCO
Y
FROM A7–T
W
STROBE (SH 1)
D
A9, VCO - N
N = 0 TO 9
(SH 1)
B,C,E,F
(N+9)
AMP
1 MHz
(SH 1)
R
INTEGRATOR
VCO
Y
9–18 MHz
U
10–19.99999 MHz
B
+ 10
T
W
A10, VCO SUM

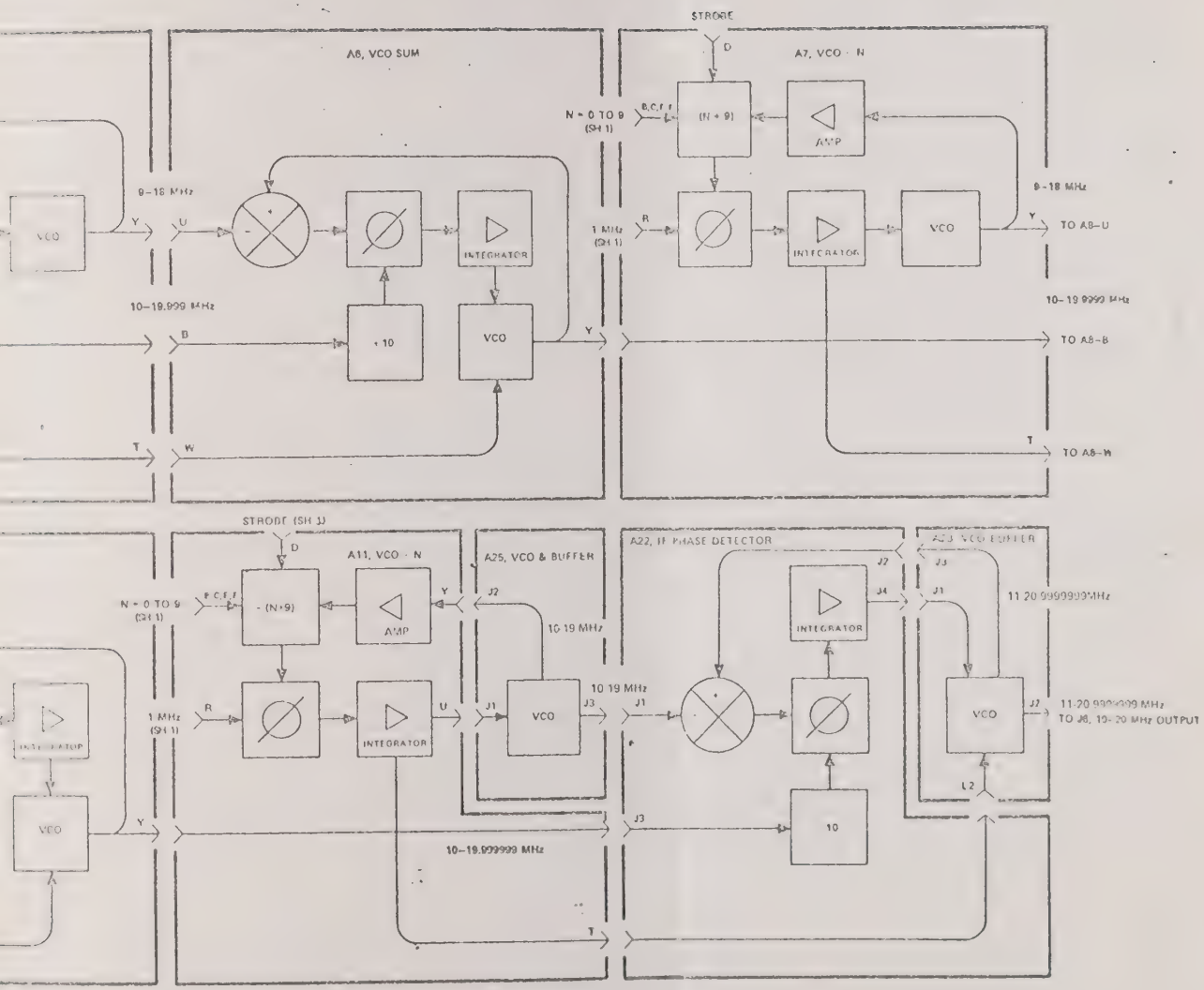

FIGURE 4.3
GENERAL BLOCK DIAGRAM
(Sheet 2 of 2)

values on the two BCD inputs when strobed by pins L and D. In the timing sequence, L (10 Hz) is strobed prior to D (1 Hz). The outputs of U5 and U1 remain fixed until updated every 100 µs with the information on the input.

U4,U7, and U2 are programmable, modulo N, decade counters. The counter control logic in U3 supplies an early decode section that increases the frequency range of U4,U7, and U2.

Thus, the 10.0 to 19.9 MHz signal on pin U2-6 is divided by N + 100 where N = 00 to 99 from U5 and U1. This is essentially a division by 100 to 199. The divide output at pin U3-9 is 100 kHz during lock. This is phase compared by U6 with the 100 kHz standard from pin R.

U6 is a phase/frequency discriminator that phase/frequency compares the input to pin U6-3 from U3-9 with a 100 kHz signal from the A12, Ref 10/1/.1 board on pin U6-1. The output of U6 on pins 2 and 3 will be either phase error information in the form of a periodic waveform or frequency error information in the form of a varying duty cycle waveform. Pin U6-12 is used to indicate lock (High) or unlock (Low) loop conditions.

PHASE ERROR CASE 1: When the 100 kHz reference frequency on pin U6-1 leads in phase the identical frequency on pin U6-3, the output on pin U6-2 remains high and pin U6-13 produces a periodic waveform whose average voltage value is proportional to the phase difference between the two input frequencies.

PHASE ERROR CASE 2: A similar result is obtained if the 100 kHz reference frequency on pin U6-1 lags in phase the frequency on pin U6-3, except that in this case the periodic waveform appears on pin U6-2 and U6 13 remains high.

PHASE LOCK CASE 3: The phase lock condition exists when identical in-phase frequencies appear on inputs U6-1 and U6-3. The output on pin U6-2 and U6-13 will be narrow negative going spikes.

FREQUENCY ERROR: For a fixed frequency difference between inputs U6-1 and U6-3, the output of U6-2 is a waveform whose duty cycle varies at a rate proportional to the input difference frequency and pin U6-13 is high. The outputs are reversed if U6-3 is higher in frequency than U6-1.

U9 is a differential input integrator which acts as the phase-locked loop charge-pump. Depending on the phase-frequency relationship of the outputs on U6-2 and U6-13, the output of U9 will increase in voltage, decrease in voltage, or remain at a particular voltage as the input on U6-1 leads, lags, or is phase coherent. U9 is well decoupled by L3,L4, and C11 so that spikes will not affect the VCO. Pin T is an output from the integrator which keeps the SUM board at least 1.5V above this voltage.

The VCO consists of two tuning varactors CR1 and CR2 along with L5, and Q1. When locked the voltage at TP1 is from 2.3 to 7.2 Vdc. Buffer amplifier Q2 feeds both the output on pin Y and the feedback TTL amplifiers Q3 and Q4. The output frequency ranges from 10.0 to 19.9 MHz.

4.3.3 Option 02 & 09 A3, VCO ÷N 9.9-19.8 MHz (page #7-05310801)

This shielded pc board is in the A3 position when the 1 Hz resolution Option 02 & 09 is installed. In the standard unit this board is not used. The operation of this circuit is identical to the A2, VCO ÷N as described in section 4.3.2 with the following exceptions: Differences include the addition of a one-count subtraction circuit in the divider chain, a change in the loop control voltage range, an output of the loop control voltage to the A4, VCO SUM board, and an output frequency range of 9.9 to 19.8 MHz.

The 9.9 to 19.8 MHz output on pin A3-Y corresponds to the 00 to 99 "N" input on the two BCD data lines containing the 100 Hz and 1 kHz thumbwheel digit information. The 1 kHz and 100 Hz thumbwheel switch setting are thus the values for "N". For 3.30 kHz dialed in, the output on A3-6 is 13.2 MHz.

The strobed 100 Hz BCD (1,2,4,8) appears on pins B,C,E,F, and the 1 kHz BCD (1,2,4,8) appears on pin H,J,M,N. U8 is a quad two input NOR gate providing a one count subtraction. Thus, the 9.9 to 19.8 MHz signal on pin U2-6 is divided by N + 99 where N = 00 to 99 from U1 and U5. This is essentially a division by 99 to 198. The divided output at U3-9 in 100 kHz during lock which is then phase compared with an external 100 kHz.

4.3.4 Option 02 & 09 A4, VCO SUM 100 kHz (page #7-05350201)

This shielded pc board is in the A4 position when option 02 or 09 is installed. The circuit has a phase frequency detector, a mixer, and a VCO which produces the sum of the inputs.

Pin Q4-U accepts the A3, VCO ÷N output of 9.9 to 19.8 MHz. This input to pin U4-4 is subtracted from the pin A4-Y output frequency of 10 to 19.999 MHz on pin U4-8 by double balanced mixer U4. The IF frequency, .100 to .199 MHz appears at pin U4-10. A low pass filter network consisting of C10,11,12,13,L2,L3,R6 rolls off the RF and LO high frequency components and the result is fed to a TTL amplifier and shaper consisting of Q1, Q2 and associated components.

U3 is a phase frequency detector that phase compares the output of Q2 with .100 to .199 MHz from presettable decade counters U1 and U2 which have divided the A2, VCO ÷N output of 10 to 19.9 MHz on pin A4-B by 100. Q3 acts as a TTL level converter.

The output of U3 on pins 5 and 10 will be either phase error information in the from of a periodic waveform or frequency error information in the form of a varying duty cycle waveform.

PHASE ERROR CASE 1: When the 100 to 199 kHz reference frequency on pin U3-1 leads in phase the identical frequency on pin U3-3, the output on pin U3-2 remains high and pin U6-13 produces a periodic waveform whose average voltage value is proportional to the phase difference between the two inputs frequencies.

PHASE ERROR CASE 2: A similar result is obtained if the 100 to 199 kHz reference frequency on pin U3-1 lags in phase the frequency on pin U3-3, except that in this case the periodic waveform appears on pin U3-2 and U3-13 remains high.

PHASE LOCK CASE 3: The phase lock condition exists when identical in phase frequencies appear on inputs U6-1 and U6-3. The output on pin U3-2 and U3-13 will be narrow negative going spikes.

FREQUENCY ERROR: For a fixed frequency difference between inputs U3-1 and U3-3, the output on U3-2 is a waveform whose duty cycle varies at a rate proportional to the input difference frequency and pin U3-13 is high. The outputs are reversed if U3-3 is higher in frequency than U3-1.

U6 is differential input integrator which acts as the phase-locked loop charge-pump. Depending on the phase-frequency relationship of the outputs on U3-2 and U3-13, the output of U6 will increase in voltage, decrease in voltage, or remain at a particular voltage as the input on U3-1 leads, lags, or is phase coherent. Pin W is an input from the A3, ÷N board which keeps the SUM board at least 1.5V below the ÷N board voltage.

U7,U5, and Q7 prevent the output of U6 from dropping below a 2.0 Vdc level. U7 compares the output of U6 with 2.0 Vdc if the output falls below 20V, U7 clocks Timer U5 which turns on Q7 and grounds pin 8 of U6. Pin 8 of U6 strobes the output of U6 to the positive supply level. After U7 notes the positive voltage output, U5 is clocked and U7 is shut off.

The VCO consists of two tuning varactors CR2 and CR3 along with L8 and Q6. When locked the voltage at TP1 is from 2.3 to 7.2 Vdc. The output frequency ranges from 10.0 to 19.9 MHz.

4.3.5 Option 02 & 09 A5, A7, A9, VCO ÷N 9-18 MHz (page #-7-05310802)

This shielded pc board is in the A5 position when the 1 Hz resolution Option 02 & 09 is installed and is always in the A7 and A9 positions. Since the only difference in these three boards is their relative positions in the chassis and the thumbwheel which controls their output frequencies, this section will only describe the board in the A5 position. The operation of this circuit is identical to the A2, VCO ÷N as described in section 4.3.2 with the following exceptions:

The differences include, the addition of a one-count subtraction circuit in the divider chain, a change in the loop control voltage to the A6, A8, and A10 VCO SUM boards, a reference input of 1 MHz, a single thumbwheel "N" input, and an output frequency range of 9 to 18 MHz.

The 9 to 18 MHz output on pin A5-Y corresponds to the 0 to 9 "N" input on the two BCD data lines containing the 10 kHz (100 kHz for A7 and 1 MHz for A9) thumbwheel digit information. The 10 kHz thumbwheel switch setting are the values for "N".

The 9 to 18 MHz signal on pin U2-6 is divided by N + 9 where N = 0 to 9 from U1. The divided output at pin U3-9 is 1 MHz during lock which is then phase compared with an external 1 MHz reference by U6. For 30,000 Hz dialed in, the input on pin U2-6 from the output of the VCO is 12 MHz.

The strobed 10 kHz BCD (1,2,4,8) "N" information appears on pins B,C,E,F. U1 is a four bit bistable latch which temporarily stores the value on the BCD lines when strobed by pin A5-D. Thus the output of U1 remains fixed until updated every 100 µs with information on its input.

U2 and U7 are programmable, modulo N decade counters. U3 is used as the counter control logic which supplies an early decode section to increase the frequency ra range of U2 and U7. U8 is a quad two input NOR gate providing a one count subtraction.

4.3.6 Option 02 & 09 A6, A8, A10, VCO SUM 1 MHz (page #7-05350202)

This shielded pc assembly occurpies the A8 and A10 position in the chassis. It also occupies the A6 position when option 02 or 09 is installed. Since the only difference in these three boards is their relative positions in the chassis and their output summed frequencies, this section will only describe the board in the A6 position. The operation of this circuit is identical to the Option 02 & 09 A4, VCO SUM 100 kHz as described in section 4.3.4 with the following exceptions.

Differences include, the removal of U1, decade counter and a different VCO ÷N frequency input. Pin A6-U accepts the A5, VCO ÷N output of 9 to 18 MHz. A phase-locked loop consists of the pin Q6-U input of 9 to 18 MHz on pin U4-4 subtracted from the pin A6-Y output frequency of 10 to 19.9999 on pin U4-8 by double balanced mixer U4. The IF frequency, 1 to 1.9999 MHz appears at pin U4-10.

U3 is a phase frequency detector that phase compares the output of Q2 with 1 to 1.9999 MHz from presettable decade counter U1 which has divided the A4, VCO SUM output of 10 to 19.999 MHz on pin A6-B by 10. Q3 acts as TTL level converter.

4.3.7 A11 VCO ÷N (1/2) 1 MHz (page #7-05310805)

This shielded circuit board is in the A11 position and its circuit description is identical to that of Option 02 A5, A7, A9 VCO ÷N in section 4.3.5 with a few exceptions:

The oscillator/buffer output is not assembled on A11, but on A25, a completely enclosed assembly. Pin Y of A11 still has the VCO output frequency from 10 to 19 MHz. The integrator output from U9 is fed to pin U of A11 and from there to J1 of A25. There is also a buffered output from A25-J3 of 10 to 19 MHz.

U8 has been removed and a jumper installed to connect the collector of Q4 to U3-1. Also U3-11 now connects to U2-7, not ground. These changes cause the loop to operate from 10 to 19 MHz with a programmable divider operating with a ÷(N+10) range.

4.3.8 A12 10 MHz Reference (page #7-05702301)

This pc board is in the A12 position and is the prime reference board used to generate the 10, 1, and .1 MHz signals which are distributed to various VCOs and strobe generators in the synthesizer.

Primarily this circuit consists of a 10 MHz VCXO which may be locked to either an internal or an external frequency standard and two decade dividers to provide the two additional frequencies of 1 and .1 MHz.

A slide switch on the rear panel selects either INT for the internal 3 MHz oscillator or EXT 1 or 5 MHz supplied externally on connector J9 REF IN. This switch controls the 4-to-1 line MUX, U4. The 3 MHz input from the internal oscillator Y1 may be entered on U4-11 after being Schmitt shaped by U1 and divided by 3 in U2. Input

from the external 1, 5 or 10 MHz may be entered after being Schmitt shaped by U1 or shaped and divided by 6 or 10 in U3. Jumpers selected the ÷5 or ÷10 function.

The 1 MHz output of the MUX, U4-9 is Schmitt buffered to the 1 MHz OUT on the rear panel and also phase locked by detector U5 to the 10 MHz VCXO. U6 is an integrating charge pump driving the varacter CR5 and crystal A12Y1. The 10 MHz fundamental frequency is amplified and buffered by Q1, Q2, and Q3. 10 MHz is available on pin A12-Y for the 100 MHz reference and is Schmitt shaped and divided by 10 in U7 before being phase detected by U5. U7 provides a 1 MHz output to the synthesizer and U8 divided it by 10 again for the 100 kHz output.

4.3.9 Option 06 A13 IEEE-488 PROGRAM (2) (page #7-05739401)

This pc assembly is used in conjunction with the IEEE-488 PROGRAM (1) card, A19, to provide the handshake circuits for remotely programming the synthesizer. Aboard this card are several flip-flops, R-S latches, and timing circuits necessary to implement the handshake. As per the standard IEEE-488 the synthesizer is a listen only device. The data lines, DI01-7, as well as the ATN, DAV, and IFC control lines are bussed to this card. The signal levels have been inverted on the A19 p.c. board and will be described as they appear on the p.c. card and not as they appear on the interface cable. Figure 4.5 is a timing diagram of the handshake as implemented in this unit.

Pin U14-8 goes low when the UNL, unlisten command is decoded on the bus at the beginning of a handshake sequence and both ATN and DAV lines are high. With DIO7 line low the IFC line high, pin U6-6 is low. Thus, Flip-Flop U7 sets board pin A13-14 low for local control. See Figure 4.6 for flip-flop states.

Pin U6-11 will also set high if the ATN line is low, as during a program sequence when an UNLISTEN (UNL) or interrupt occurs. This high will set both the NDAC, A13-11 and NRFD, A13-10, lines high denoting the interrupt condition. Normally the pin U6-11 is low allowing the handshake lines NDAC, NRFD, AND DAV to interact.

The handshake is controlled aboard the Model 1600B by the NDAC, NRFD, and the DAV lines. U10-6 gates the DAV signal with a high indication from pin A13-A during a program sequence. With the data on the lines, the low DAV line sets the NRFD line high pin A13-10 and NDAC line low pin A13-11. The source sends a high DAV, data valid signal, which produces a rising 8.8 ps delayed clock edge on pin U8-3 and the NRFD line goes low. Data has been accepted. Simultaneously pin U9-9 is clocked low which produces a rising 8.8 ps delayed clock edge on pin U8-11 and the NDAC line goes high. The source senses the high on NDAC and sets the DAV low, data on the lines is not valid. The cycle begins again with NRFD line high and NDAC low.

Another error condition which will set pin U6-11 high and thus will set both the NDAC and NRFD lines high, is during addressing of the Synthesizer. If the address of the unit set on the rear panel is not the same as the code addressed by the source, a high will appear on pin U6-11. If the code is identical however, comparator U15 will produce a high output to NAND gate U7. This high is NANDed with the address message cecoded on A19 from A13-16. This low and the low DIO7 line is inverted to a high which puts a low on flip-flip U7. Pin U7-6 is now high. As a result, the high appears on A13-14 which will place the unit into remote operation and sets up the handshake gate U6-8 so A13-13 presents a high level whenever the unit is ready to accept data.

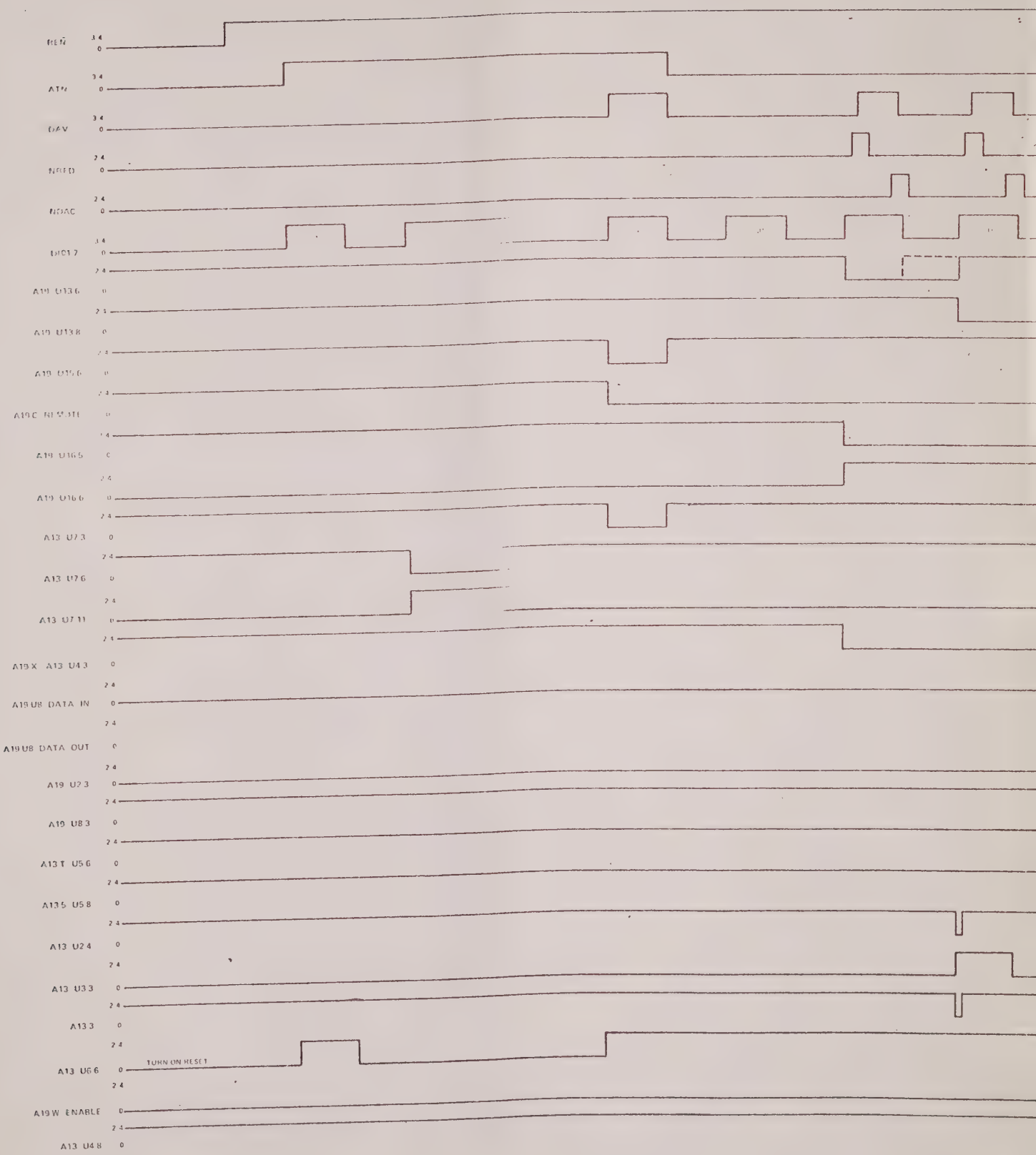
REN
ATN
DAV
NRFD
NDAC
DIO17
A19 U136
A19 U138
A19 U156
A19C RESET
A19 U165
A19 U166
A13 U73
A13 U76
A13 U711
A19X A13 U43
A19U8 DATA IN
A19U8 DATA OUT
A19 U23
A19 U83
A13T U56
A135 U58
A13 U24
A13 U33
A133
A13 U66
TURN ON RESET
A19W ENABLE
A13 U48

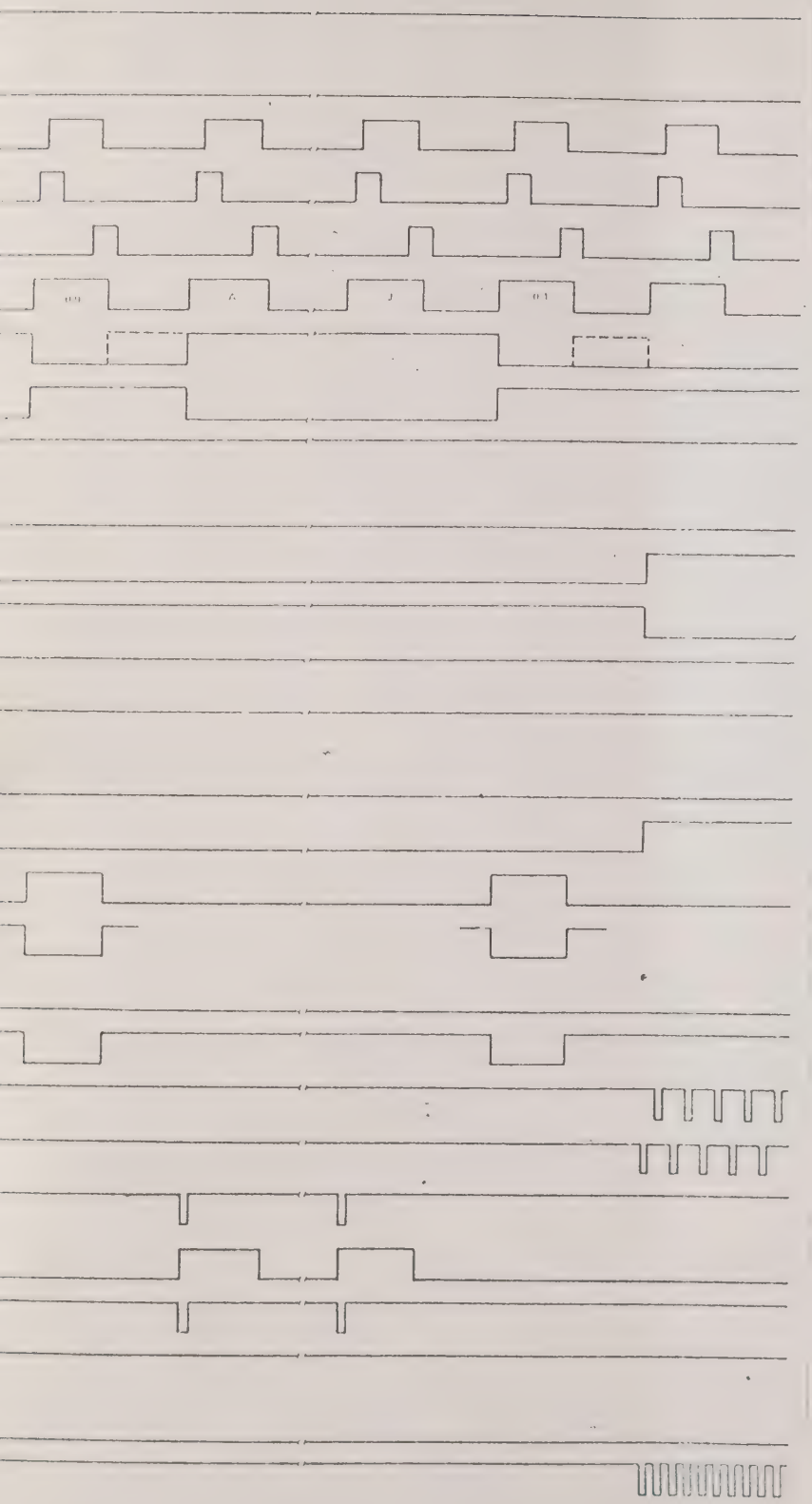

FIGURE 4.5 TIMING DIAGRAM
IEEE 488-1975 INTERFACE
(Sheet 1 of 2)

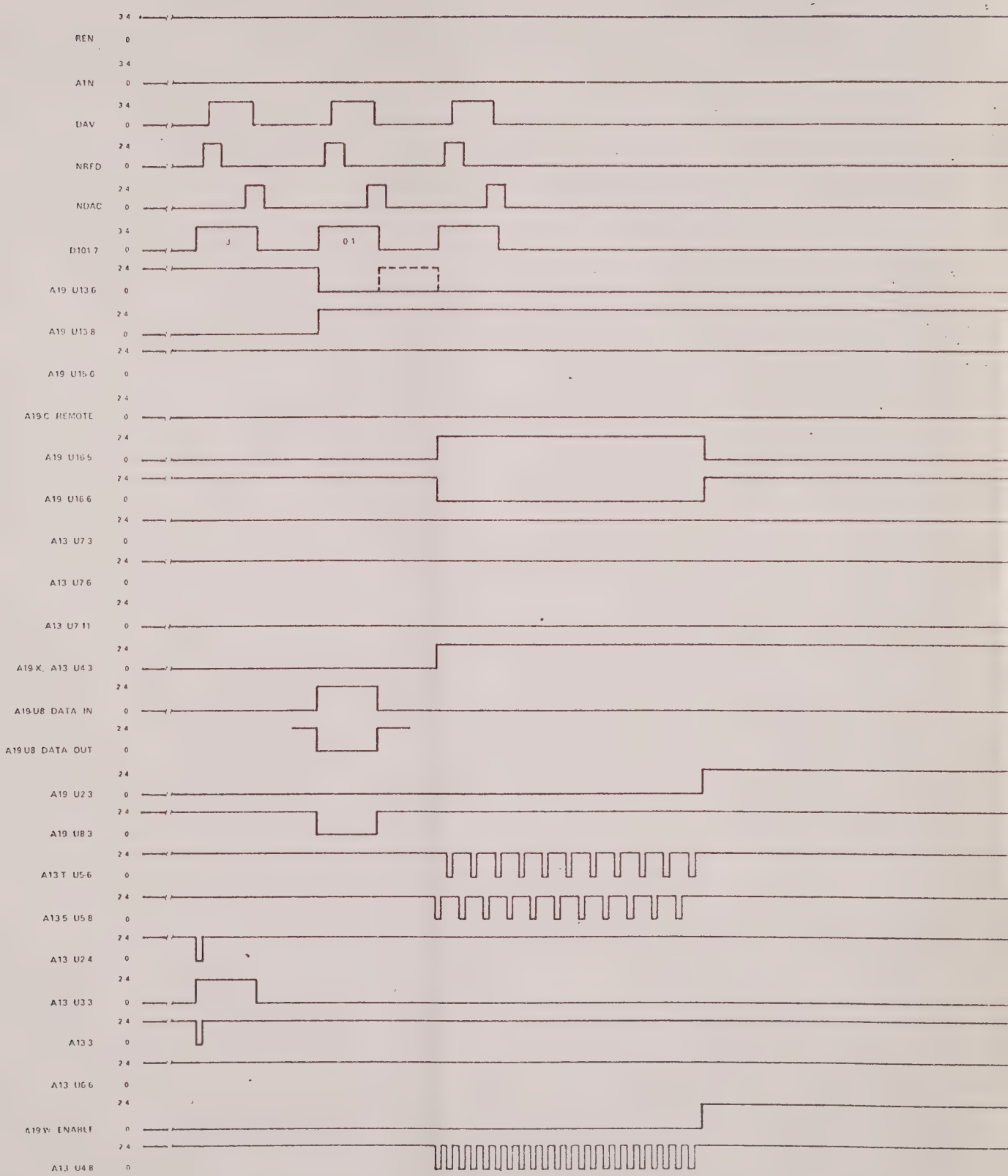
REN
ATN
DAV
NRFD
NDAC
D101 7
A19 U13 6
A19 U13 8
A19 U15 6
A19 C REMOTE
A19 U16 5
A19 U16 6
A13 U7 3
A13 U7 6
A13 U7 11
A19 X, A13 U4 3
A19 U8 DATA IN
A19 U8 DATA OUT
A19 U2 3
A19 U8 3
A13 T U5 6
A13 S U5 8
A13 U2 4
A13 U3 3
A13 3
A13 U6 6
A19 W ENABLE
A13 U4 8

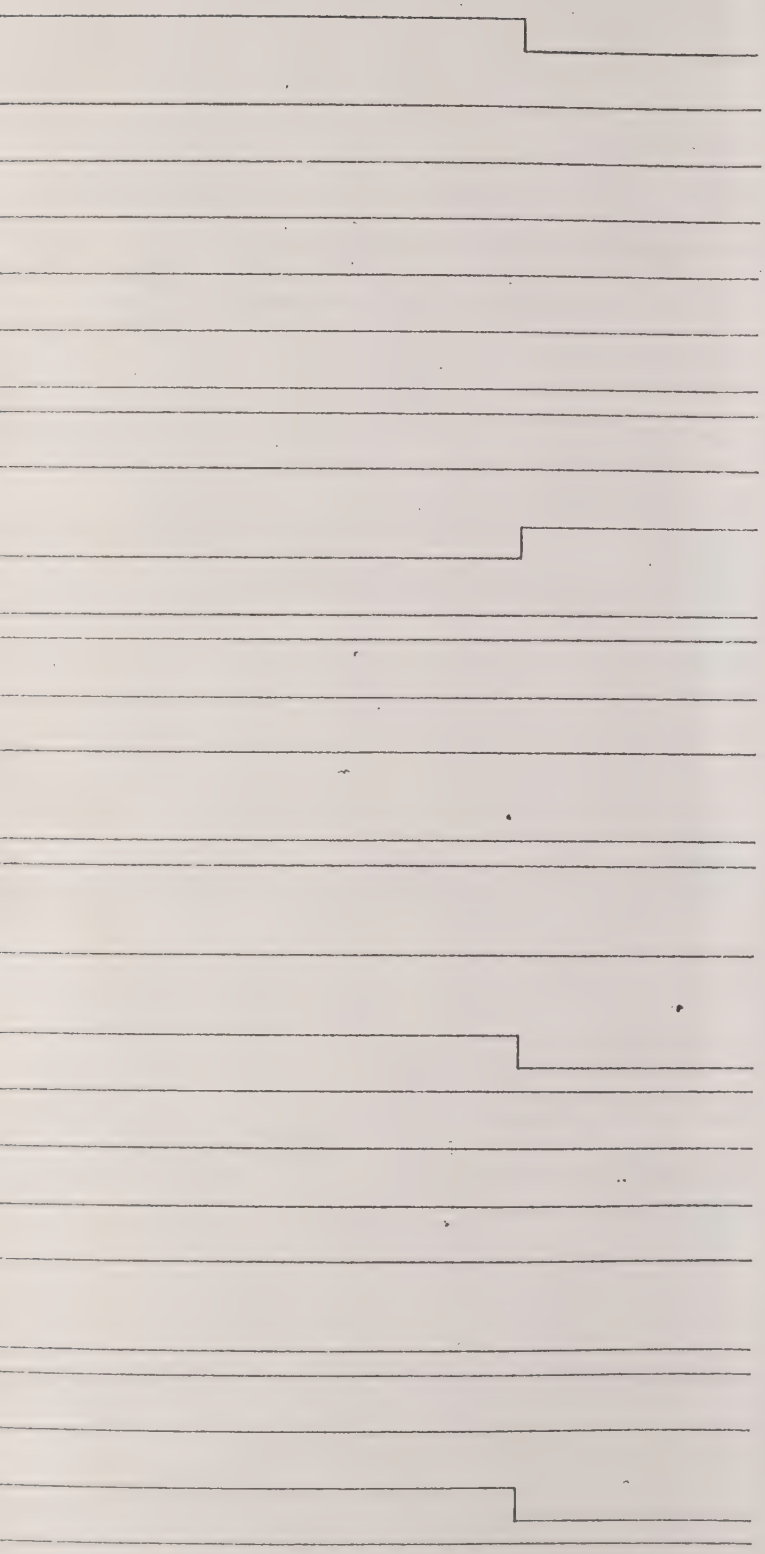

FIGURE 4.5 TIMING DIAGRAM
IEEE 488-1975 INTERFACE
(Sheet 2 of 2)

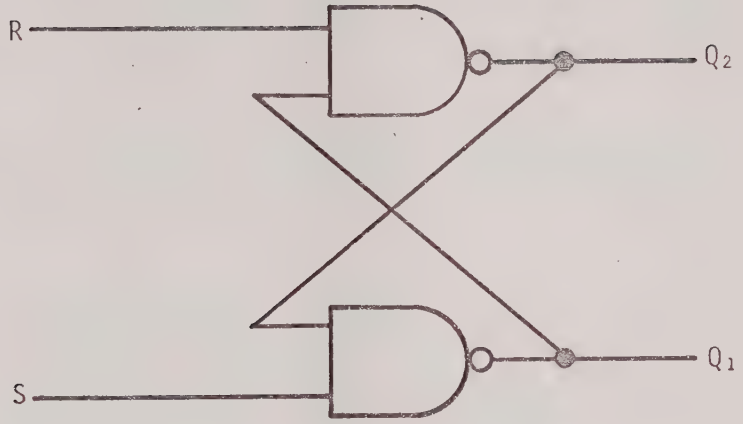

S	R	Q_1	Q_2
		**	**
inactive	L	H	Q_1	Q_2
L	H	H	L
H	L	L	H
L	L	H*	H*

** = previous state

* = will not persist

FIGURE 4.6 R-S FLIP-FLOP

A turn on reset is provided on A13 by U7-8 and components Q1,C3,R5 and R4. The base of Q1 is negative with respect to the collector at initial turn on since C3 acts as an ac short. Q1 is off so U7 inverts the High on the collector to a low on U7-8. This is used to reset the handshake and provide A19 with a reset from A13-12. After a RC tune the base of Q1 is high and Q1 is on. The input at U7-9 is low, thus U7-8 becomes and remains high.

U4-6, U3-6, U3-11, U5-12, U12-6, and U12-8 decade the beginning, <, or end, >, of program data. Flip-flop output U4-3 goes low when a beginning of program is sensed and U12-6 is high and U12-8 is low. During the program cycle both U12-6 and U12-8 go high thus keeping flip-flop U4 is an unchanged low state. The end of program code sets U12-6 low and U12-8 high which sets the U4-3 output high denoting the non-program state.

A high on U3-3 detects an alpha character from the A19 board which triggers a 3 μs negative going pulse from U2-4. This pulse is used to clear a flip-flop on A19 via pin A13-4 and to send a low pulse from AND gate U10-3 to clear a preset counter on A19 via A13-3.

The end of program pulse at A13-A is stretched by one shot U2 and the $\overline{Q}$ pulse is gated by U10 to clear the A19 preset counter, U9 address. The Q output pulse is inverted at U5-10 and clears the four state flip-flop pair U11. This produces a high on U5-6 and U5-8. The clock generator U1 is inhibited at this time also. The frequency of the clock is ≥500 kHz since this is necessary to transfer all the data from RAM A19U8 to RAM A19U2 within the window time allowed by the Model 1600B internal clock.

The transfer of data from A9U8 to A19U2 is implemented by the flip-flops U11. A store, delay, clear address, delay sequence is produced at U5-6 and 8. So that data stored in the A19U8 RAM may be transmitted to the A19U2 RAM. Selector A19U11-3 detects an end of program code or end of addressed data from A19-U which switches from interface addressing to internal addressing from A14.

4.3.10 A13 Remote Frequency Selector (old) (page #7-05391901)

This unshielded board is in the A13 position and accepts serial as well as Parallel entry of remote frequency selection data from the rear panel mounted Remote Program, J4, 50 pin connector.

SERIAL

U5 and U8 are 4-to-1 line multiplexers which, in the serial mode only, are turned off by points S1 and S2 tied to ground so U1-11 drives the output control lines of U5 and U8 high. With points 1,2, and 4 grounded, the strobe line to the 8-to-1 data selectors, U4,6,7, and 9 is low, thus allowing each bit to be bussed to U2. U4 is the 1's bit, U6 is the 2's bit, U7 is the 4's bit and U9 is the 8's bit. Thus, each 4-bit word is entered in parallel bit, serial word mode.

The 1,2,4, and 8 bits of each digit are presented simultaneously to inverters U1-3,6 and U3-3,6. Since the 64-Bit Read/Write memory, U2, inverts the data before reading or writing, the output BCD on A13-U,15,17, and 16 will be the non-inverted data as read-in from J4. The Address is entered the Low injected on the A13-S control line

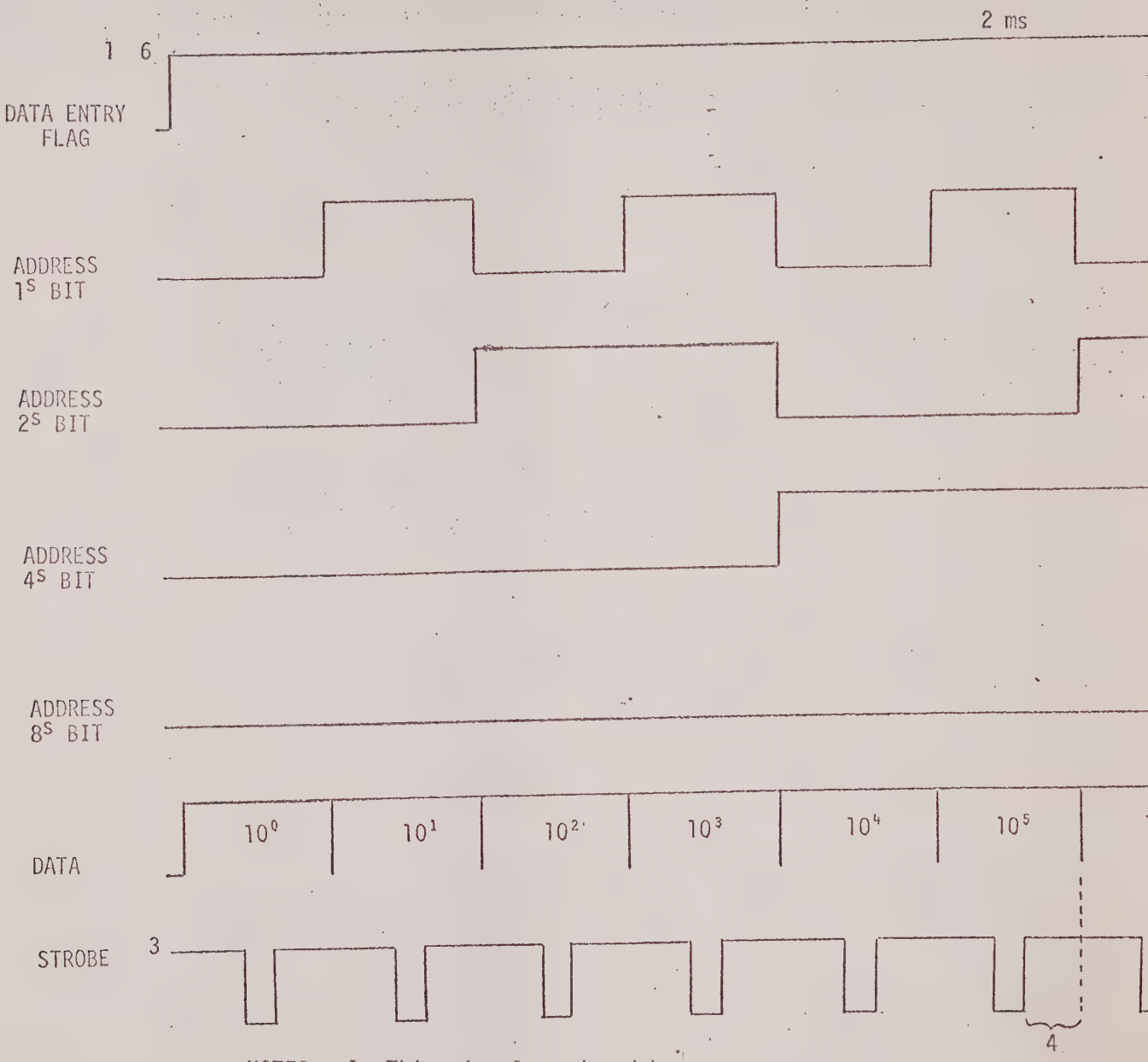

NOTES:

1 This signal produced by the Model 1600B.

2 No Data to be entered coincident with end of Data Entry Flag.

3 Maximum Pulse Rate is 100 kHz.

4 Strobe pulse must end at least 1 microsecond before data is changed.

5 Strobe pulse must be at least 1 microsecond wide with the rise and fall time no more than 10% (each) of pulse width.

6 Data entry flag length is approximately 2 ms.

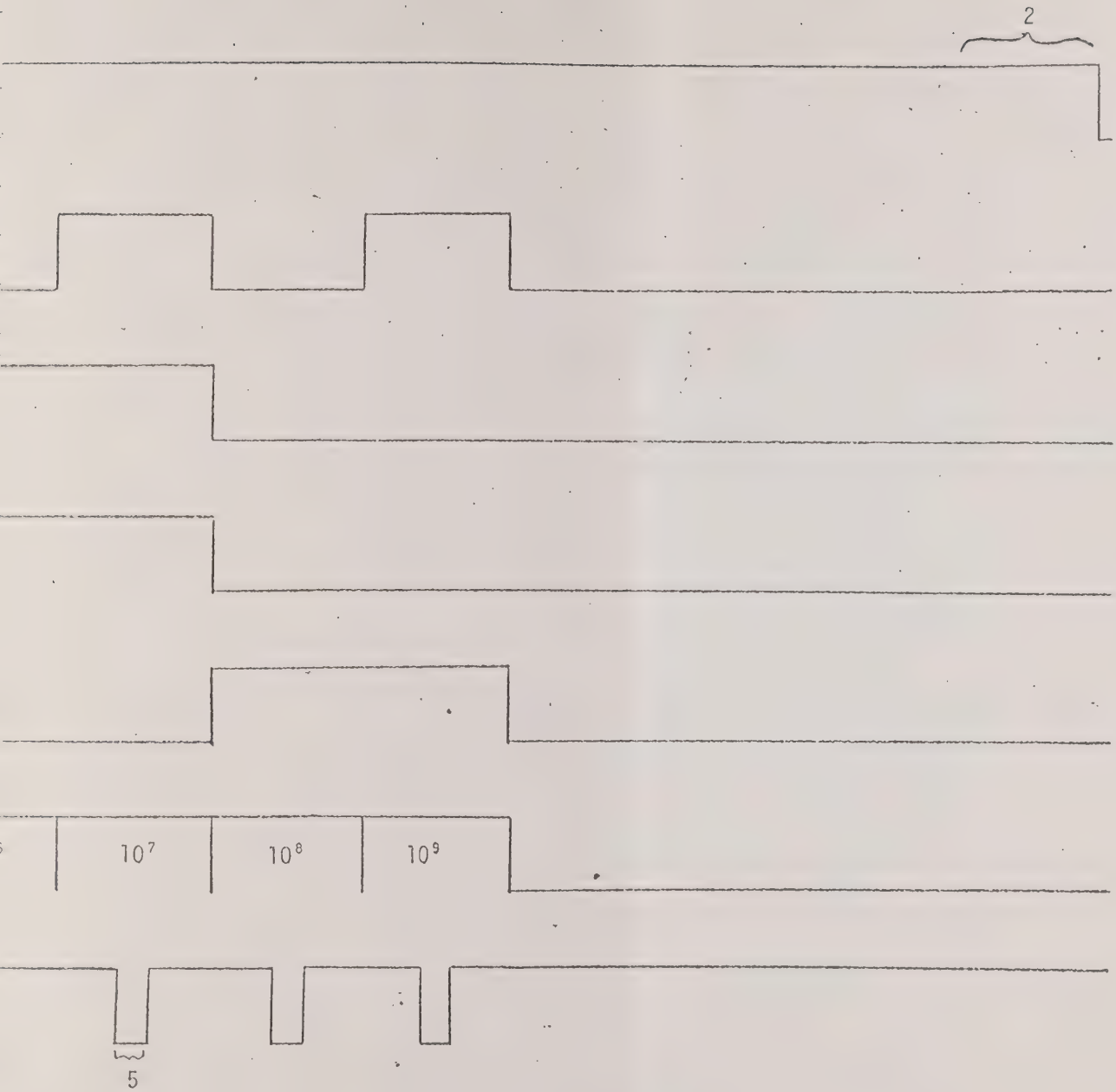

FIGURE 4.7
TIMING DIAGRAM OPTION 05,
SERIAL PROGRAMMING.

places U2 in the WRITE mode and the BCD word on pins U2-4,6,10, and 12 is entered into memory location specified by the address on pins U2-1,15,14, and 13. While writing the U2 sense outputs on pins U2-5,7,9, and 11 exhibit the input data.

With a high on control line A13-S, the READ mode is selected. In this mode, U2 presents the word selected by the address on pins U2-1,15,14, and 13 on the sense output pins U2-5,7,9, and 11.

The U10, 4-Bit Bistable Latch, in the 10^{10} bit information storage and remains on for all data entry information. See Figure 4-7 for timing the data input.

PARALLEL

In the parallel mode of operation each digit is serially strobed internally by the address input calling for each BCD digit in sequence from the MSD to the LSD. U2 presents the data out when strobed by A13-S. U10 continually gates the 10^{10} digit input with each strobe pulse.

4.3.11 A14 Frequency Control (page

This board has two functions. Half the circuitry is used as the timing strobe for the internal signal control and the other half processes the frequency selection information from the A1, Thumbwheel Switch Board and the A13, Remote Frequency Select Board on the A19, Program Board.

The strobe function controls the timing of the internal data. The 100 kHz TTL clock signal is received on pin A14-19 from the A12 REF 10/1/.1 board and is used to clock the BCD UP/DOWN Counter, U13. U13 is wired in the UP count mode so that the BCD-to-Decimal Decoder, U12, decodes a decimal count from 0 to 9 on ten lines at a 100 kHz rate. Pins U13-6,11,14, and 2 are BCD weighted 1,2,4, and 8 respectively. Table 4-1 shows the order in which the thumbwheel information is retrieved.

TABLE 4.1 THUMBWHEEL STROBE ORDER

DECODED DECIMAL NUMBER	PIN STROBED HIGH	THUMBWHEEL SWITCH COMMON LINE INTERROGATED
0	A14-P	A1-7 (1 GHz)
1	A14-15	A1-H (100 MHz)
2	A14-N	A1-6 (10 MHz)
3	A14-14	A1-F (1 MHz)
4	A14-M	A1-5 (100 kHz)
5	A14-12	A1-E (10 kHz)
6	A14-13	A1-4 (1 kHz)
7	A14-R	A1-D (100 Hz)
8	A14-16	A1-3 (10 Hz)
9	A14-S	A1-C (1 Hz)

The strobed BCD thumbwheel information returns to pins A14-27,16,15, and 14 (1,2,4, and 8 respectively). U16, then acts as a 4-Bit And/Or selector and can select this thumbwheel information on the BCD information from the A13, Remote Frequency Selector

board. A14-22 pulled low will select the remote input lines, otherwise the U16-9 pin remains high. The selected input to U16 is then supplied to pins A14-Z,AA,Y, and X by three state buss buffers U15-11,8,6, and 3. From here the BCD data is routed to the N BUS line on pins A10-B,C,E, and F.

As the N input data is being presented on the common BUS line, a timing strobe is generated in another section of the board. The UP count from U13 is decoded from the common BCD BUSS line through the U3-2,4,6, and 10 drivers by U1. This BCD-to-Decimal Decoder is similar to U12 except the activated line outputs are low transition which need to be inverted by U9,U10, and 11; and U1 blanks all output lines (all lines high) if a high appears on both pins U1-13 and U1-12 sinultaneously. The blanking capability is used to delay the decoded strobe output from U1.

The dual one-shot multivibrator, U5 receives the 100 kHz clock signal through NOR gate U14-11 on pin U5-9. This clock is gated by Dual D flip-flop, U4, in the serial programming mode. U4 receives a clock pulse on U4-3 from the UP counter U13, pin U13-7. U4 sends a strobe to the address selector, U8. This allows the BCD on U8-3, 6,10, and 13 to be stored when pin U8-1 is high and then A13 is accepting the BCD into memory. When pin U8-1 goes low, the address of the next data from A14-A,B,C, and C is coupled through U8 to A13. U4 is controlling the clock gate to U5 at the same time. The dual monostable multivibrator, U5, delays the 100 kHz clock signal from pin U13-19 to the U2, OR gates by one half cycle. Thus, the gates U2-6 and U2-8 are driven high which makes all the outputs on the U1, BCD-to-decimal driver high, and the inverted outputs low.

Table 4-2 shows the order in which the VCO ÷N boards and the D to A Converter receive the strobe pulse.

TABLE 4-2 VCO ÷N and D to A STROBE ORDER

DECODED DECIMAL NUMBER	PIN STROBED HIGH	VCO ÷N or D to A LINE STROBED	
0		STD	OPT 02 & 09
0	A14-E	"	A16-19 (1 GHz)
1	A14-F	"	A16-13 (100 MHz)
2	A14-H	"	A11-D (10 MHz)
3	A14-J	"	A9-D (1 MHz)
4	A14-K	"	A7-D (100 kHz)
5	A14-6	A5-L	A5-D (10 kHz)
6	A14-5	A5-D	A3-L (1 kHz)
7	A14-7		A3-D (100 Hz)
8	A14-9		A2-L (10 Hz)
9	A14-8		A2-D (1 Hz)

4.3.12 Option 09 A15, Multiplier Computer Calculator (page

The TMS0117NC Calculator Chip, U9, provides all necessary timing for data management. Oscillator U10, supplies the required input clock signal. Since U9 is a CMOS device, +7.2 and -7.2 Vdc sources are provided for it and all inputs and outputs must be buffered.

The chip has an ERROR output which indicates overflow or other improper conditions. This output is gated into the chip RESET via U5-6 to automatically reset the calculator.

The output from the calculator is in BCD format, word serial. There is always an output present on the data lines which corresponds to the operation being performed (just like any electronic calculator). This data is not used, however, until the READ OUT QUOTIENT interval. Control is accomplished by inhibiting the ten output strobe lines. These strobe lines are used to enable the various storage latches in the frequency generation section of the Model 1600B. During data readout, each output strobe produces a pulse when its related data is present on the four data output lines. See Figure 4.8 and Timing Diagram Figure 4.9 for a combined schematic of the A15 and A17 Calculator and Logic Boards, and their timing diagram.

4.3.13 A16, D to A Converter (page

This unshielded board takes two strobed inputs of BCD data, and produces an analog voltage and two lines of BCD data. These outputs are then distributed by the rear panel connector, J3 and used to pretune the YIG oscillators and control the area of operation in the Microwave Synthesizer unit.

Pins A16-19 (1 GHz) and A16-13 (100 kHz) receive the strobe input from A14, as well as the BCD data input on pins A16-7,8,10, and 11. Four bit bistable latches U1 and U2 store the BCD data on output pins 16,15,10, and 9 when the strobe lines are enabled. U3 is a digital-to-analog converter which converts the two input words of BCD, 00 to 99, to an analog output of 0.0 to 9.9 Vdc. The steps are .1V per decimal digit. So for an input of 12 (1.2 GHz) pin A16-16 will be at 1.2 Vdc. The .1 and 1 GHz BCD words are also fed to connector J3 by pins A16-4,6,5, and 3 (100 MHz) and A16-17,18,20, and 21 (1 GHz).

4.3.14 Option 09 A17, Multiplier Computer Logic (page

Two cards A15 and A17 process the frequency information and provide an output frequency which is always between 1 and 2 GHz.

The TMS0117NC calculator chip on A15 requires its input to be in serial format, controlled by the calculator's internal timing system. The divided information (desired output frequency) is presented on pins B,C,D, and E in 4-bit words as controlled by a synchronous counter on the frequency control board. This counter is reset and clocked by the calculator to properly present the information. The 10 GHz digit inputs on pin 9 and the divisor information from the A16, D/A card on pins 2,3,4, and 5. All of this information is processed by data multiplexer, U6.

Sequencing for the entire calculators routine is controlled by a 16 state binary counter U3, decoder U4 and various gates. The sequence is shown in Table 4.3. Note that the decoder, U4 is specially connected to give outputs starting at 0 when the counter reads 8 and continuing to 7 when the counter reads 15.

The actual start of the sequence is the reset interval. See Figure 4.9 Timing Diagram. During this time, the calculator chip, the counter on the frequency control board, and the control flip-flop, U5, are reset. Following reset, the low level signal on pin 9 of U4 turns on switch U7-6 connecting the 10^{10} data to multiplexer U6.

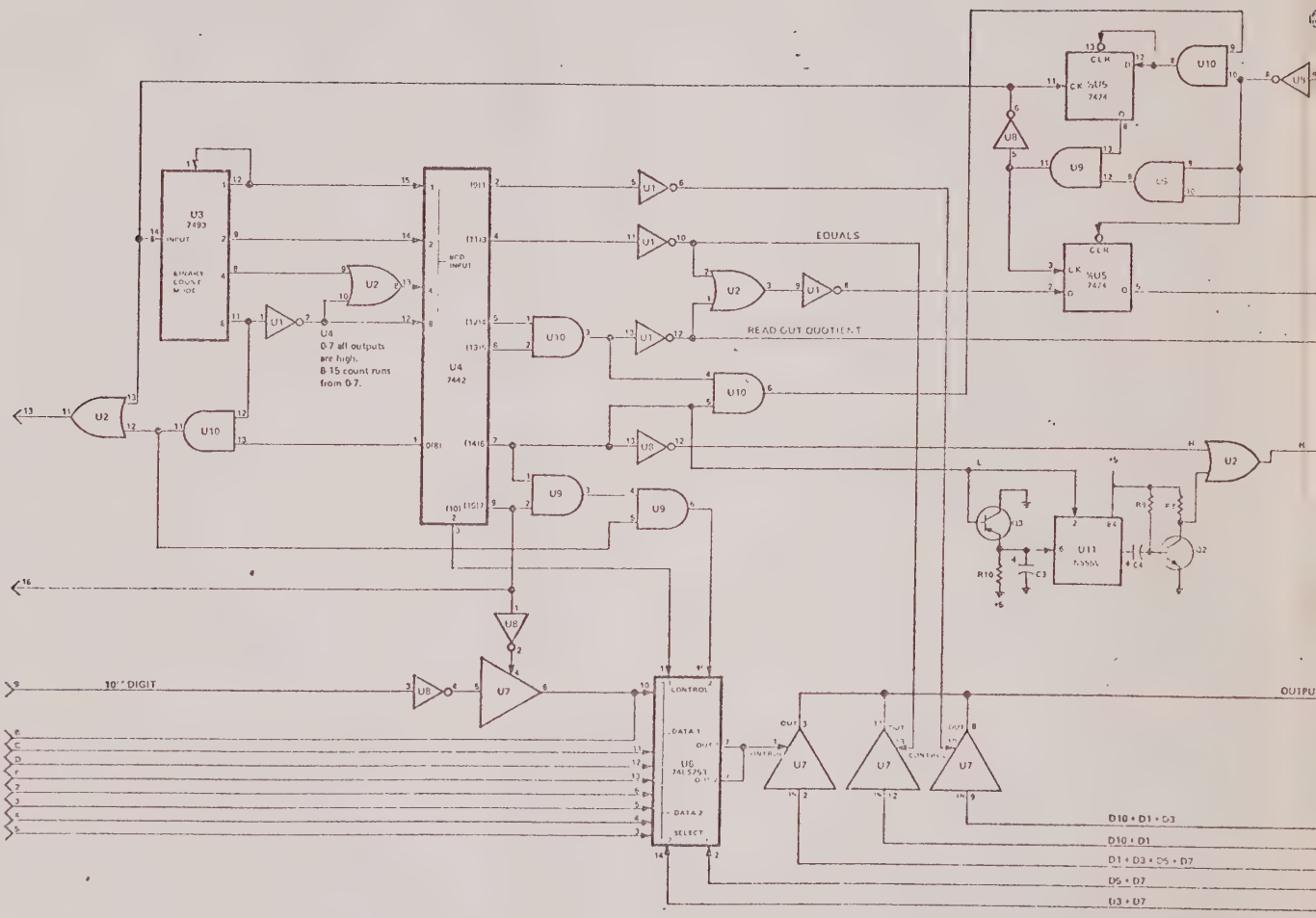
U3
7493
INPUT
BINARY COUNT MODE
U4
7442
BCD INPUT
U4
0-7 all outputs are high.
8-15 count runs from 0-7.
EQUALS
READ OUT QUOTIENT
CLR
CK
½U5
7474
U11
N555A
10'' DIGIT
CONTROL
DATA 1
DATA 2
SELECT
U6
74LS253
OUTPU
D10 + D1 + D3
D10 + D1
D1 + D3 + D5 + D7
D5 + D7
D3 + D7

1600B-4-77

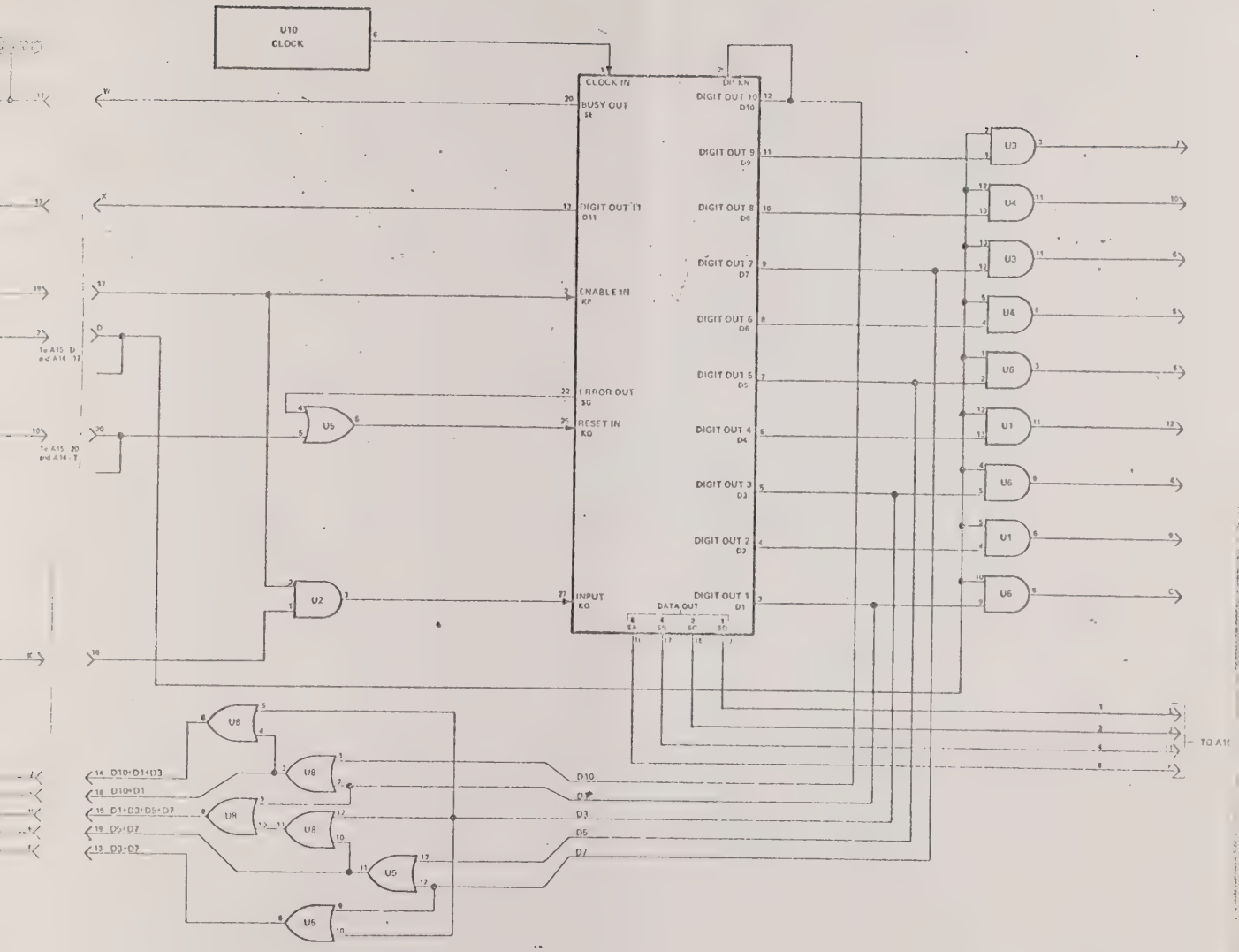

FIGURE 4.8
OPTION 09, A15 and A17
CALCULATOR AND LOGIC BOARDS

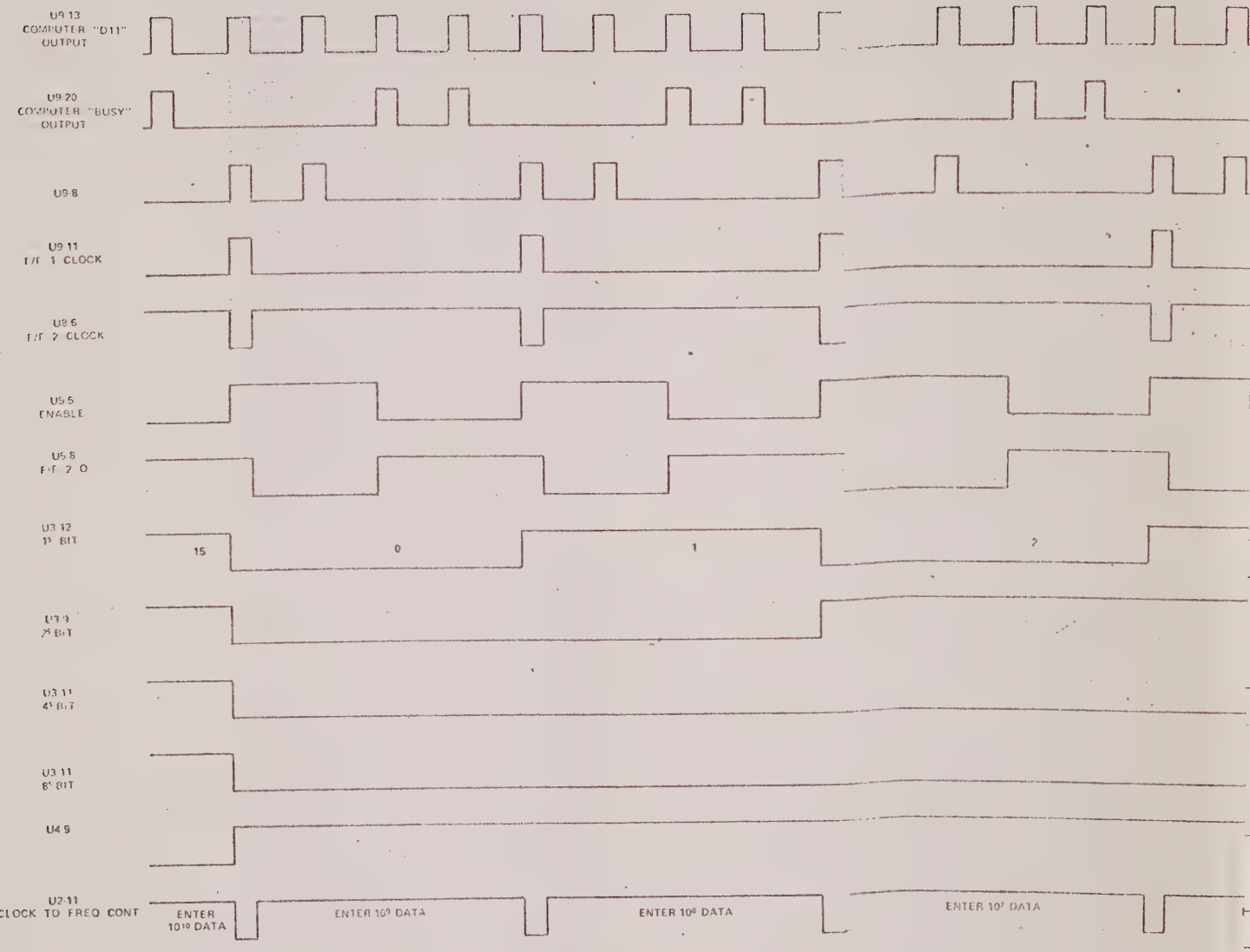

NOTE: ALL IC's REFERENCED ARE ON A19, LOGIC BOARD

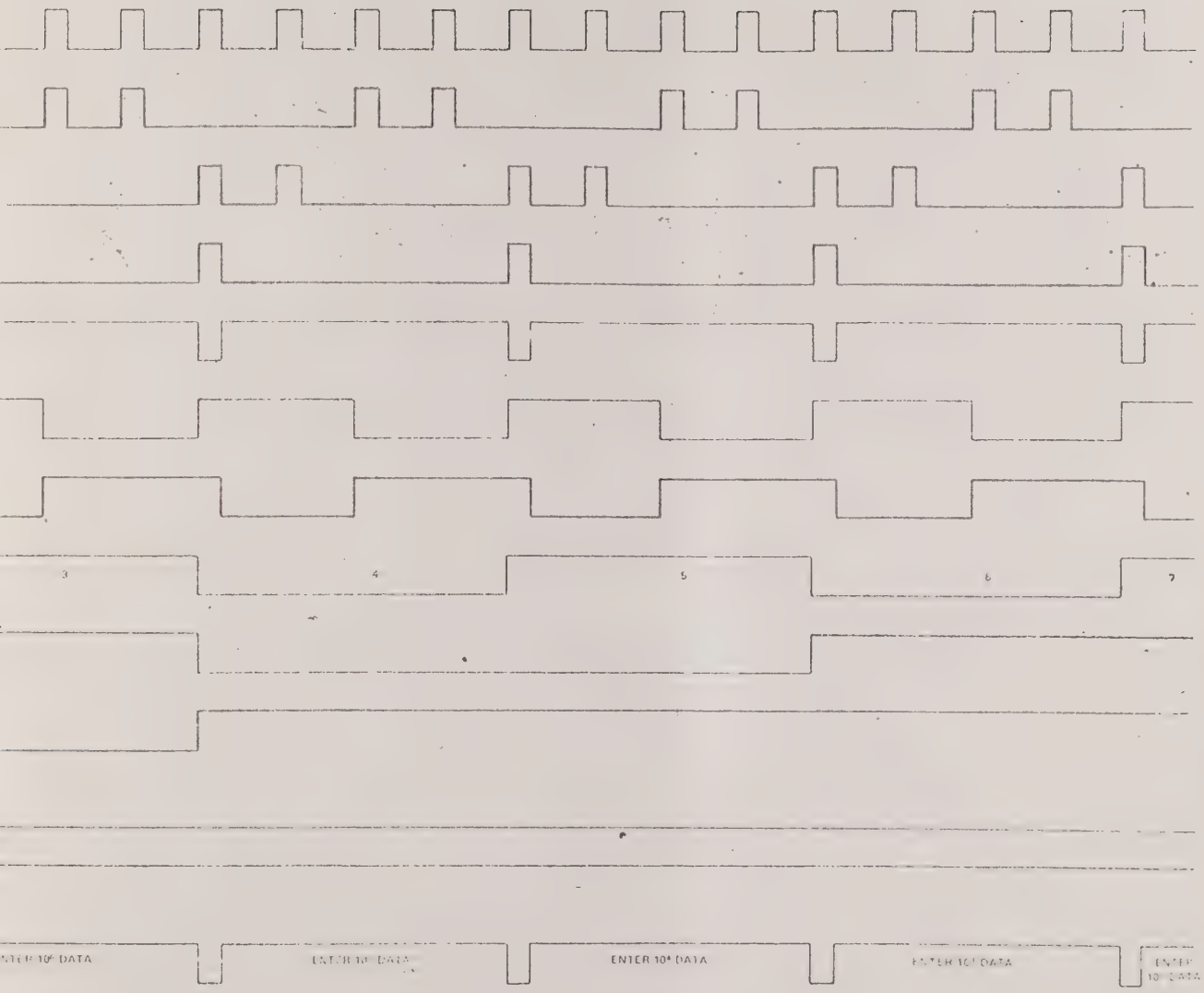

FIGURE 4.9
OPTION 09, TIMING DIAGRAM
(Sheet 1 of 4)

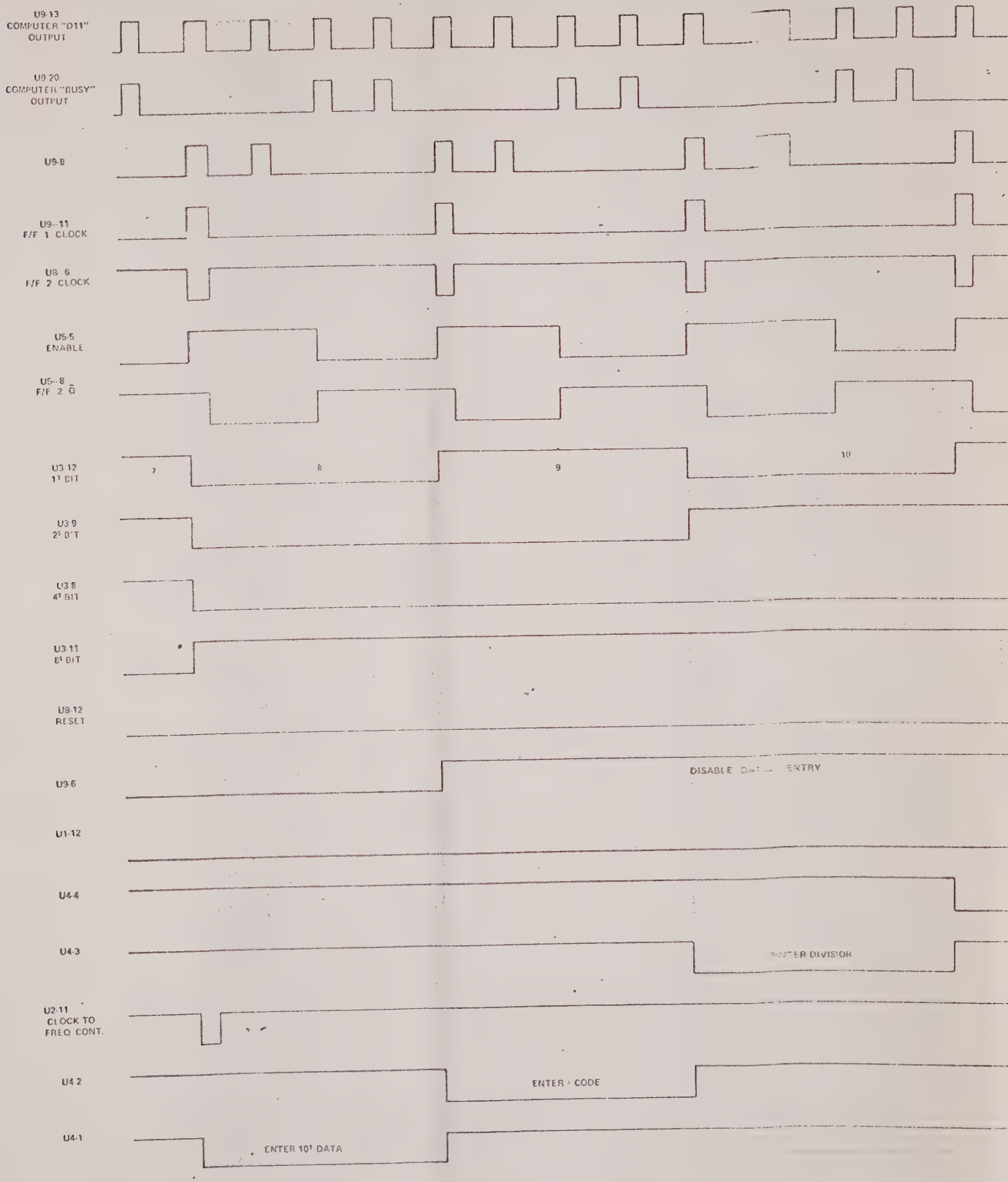

NOTE: ALL IC's REFERENCED ARE ON A19, LOGIC BOARD

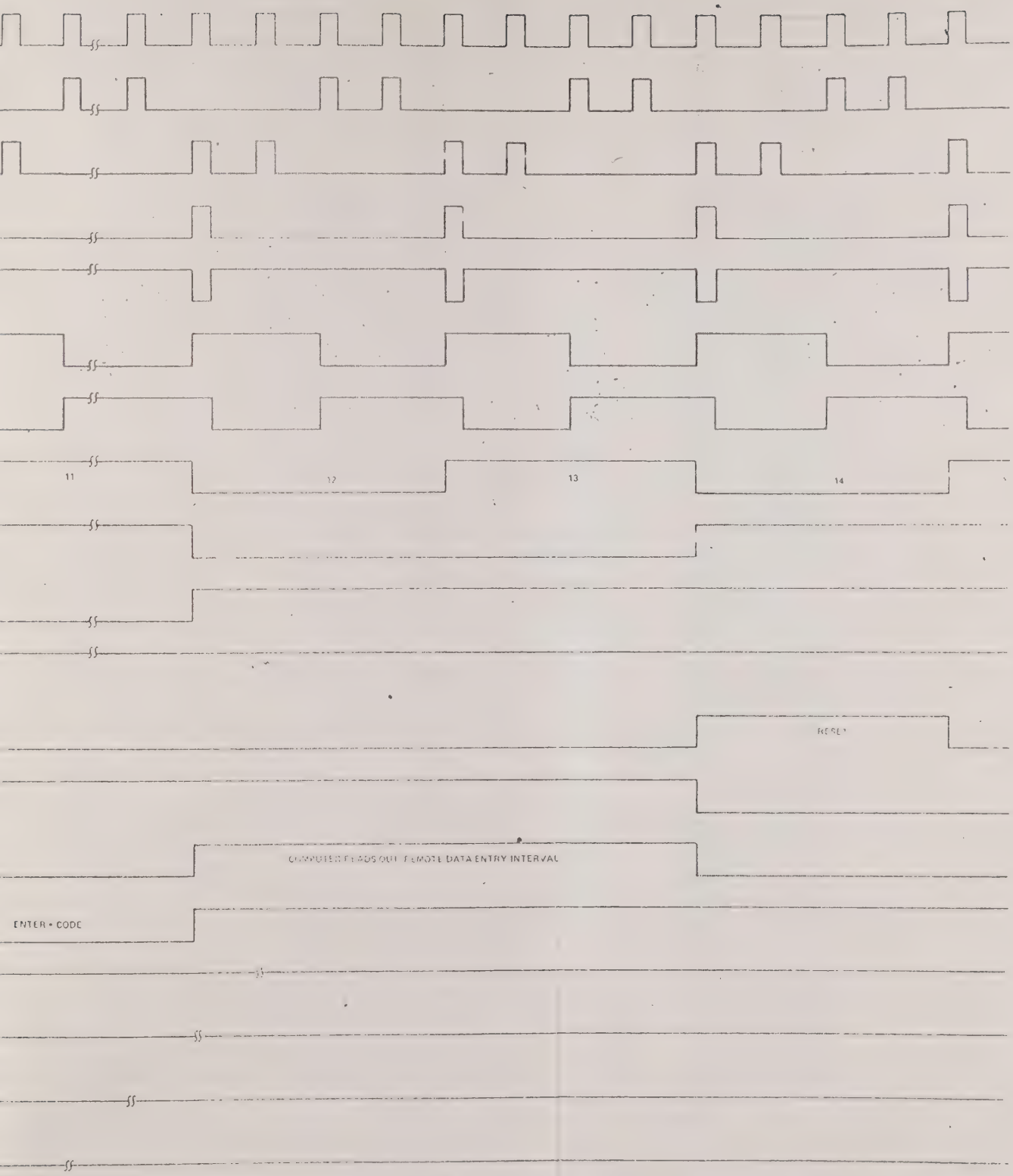

FIGURE 4.9
OPTION 09, TIMING DIAGRAM
(Sheet 2 of 4)

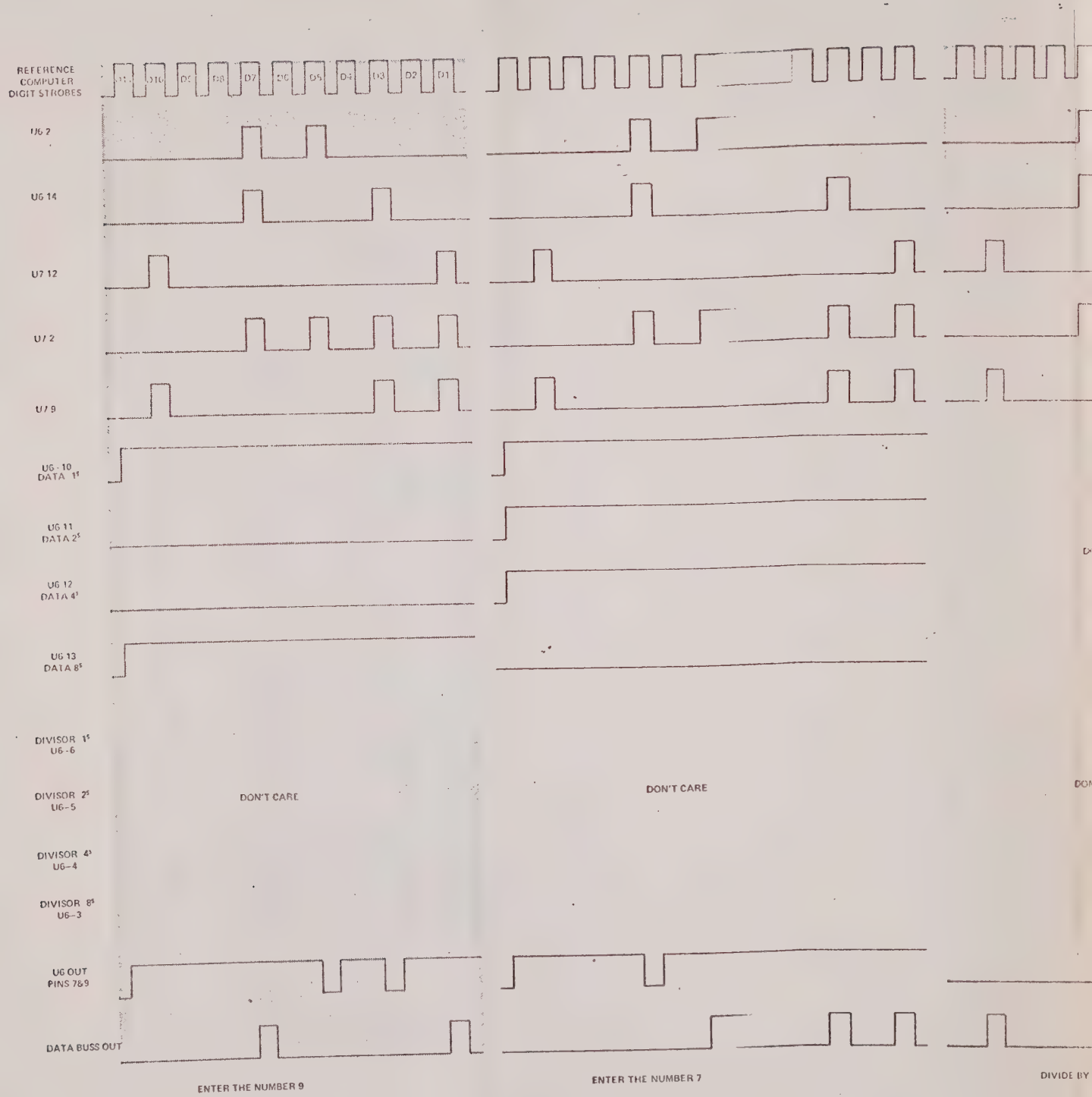

NOTE: ALL ICS REFERENCED ARE ON A19, LOGIC BOARD

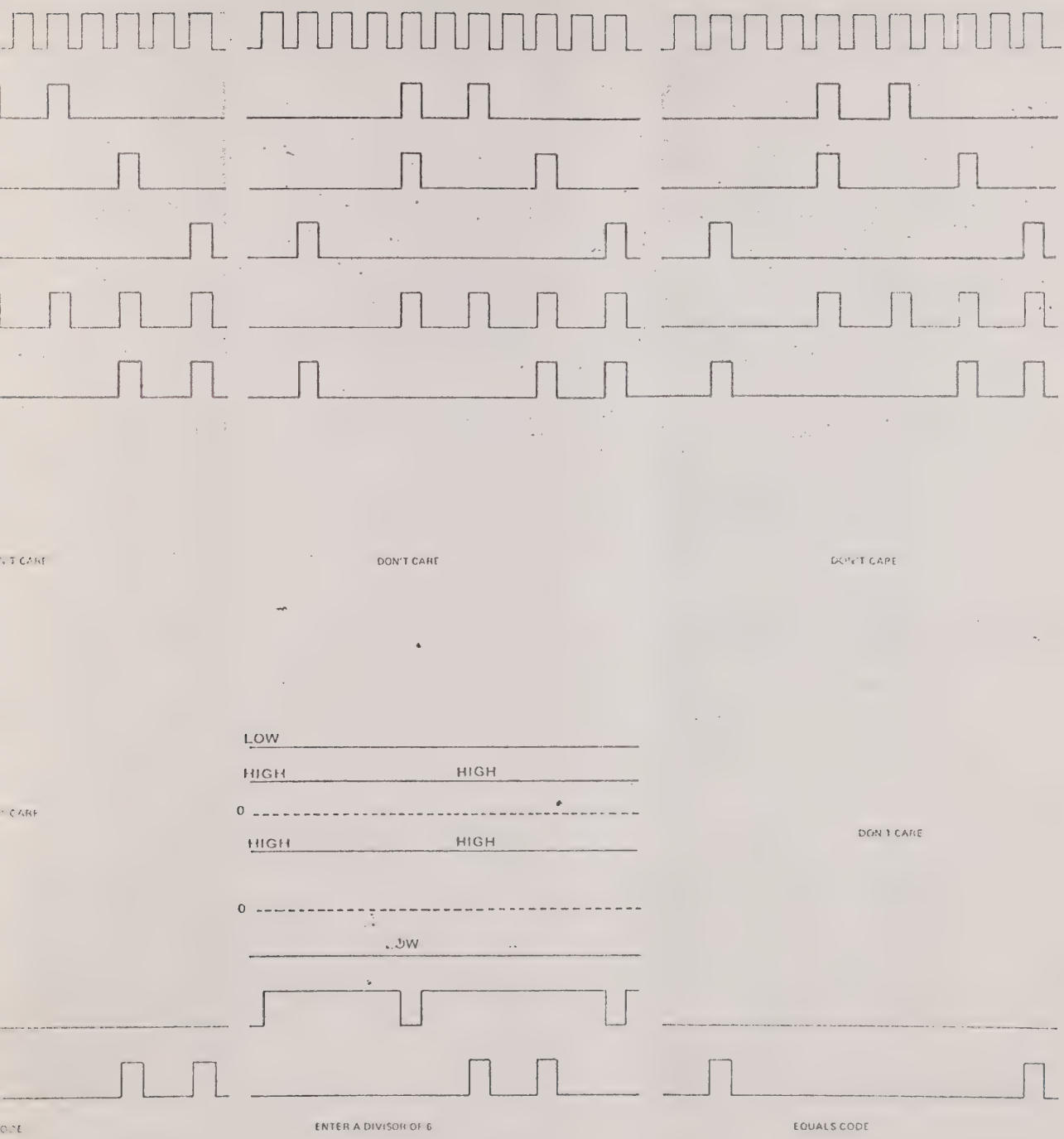

FIGURE 4.9
OPTION 09, TIMING DIAGRAM.
(Sheet 3 of 4)

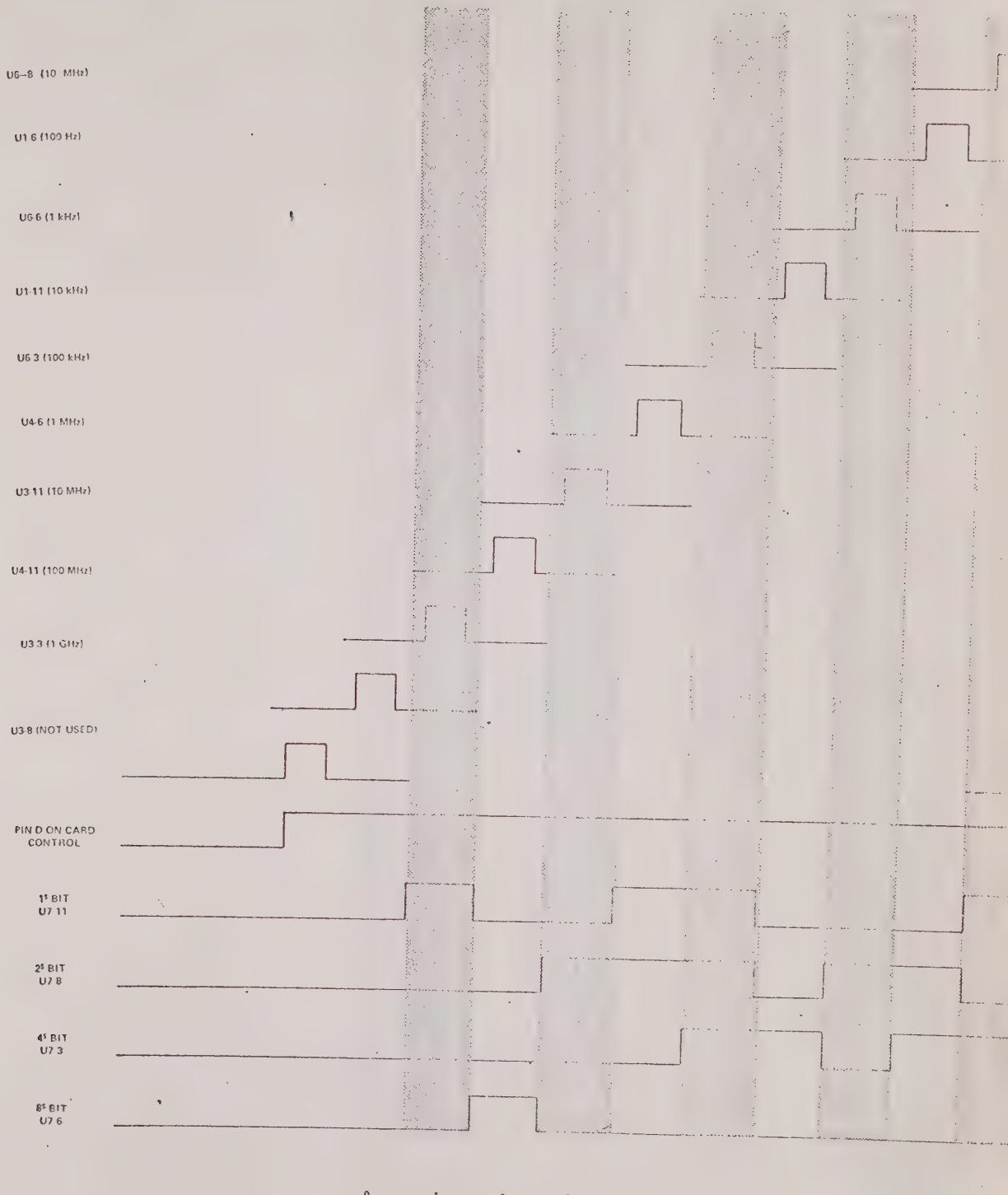

NOTE: ALL ICs REFERENCED ARE ON A2, CALCULATOR BOARD

1600B-4-77

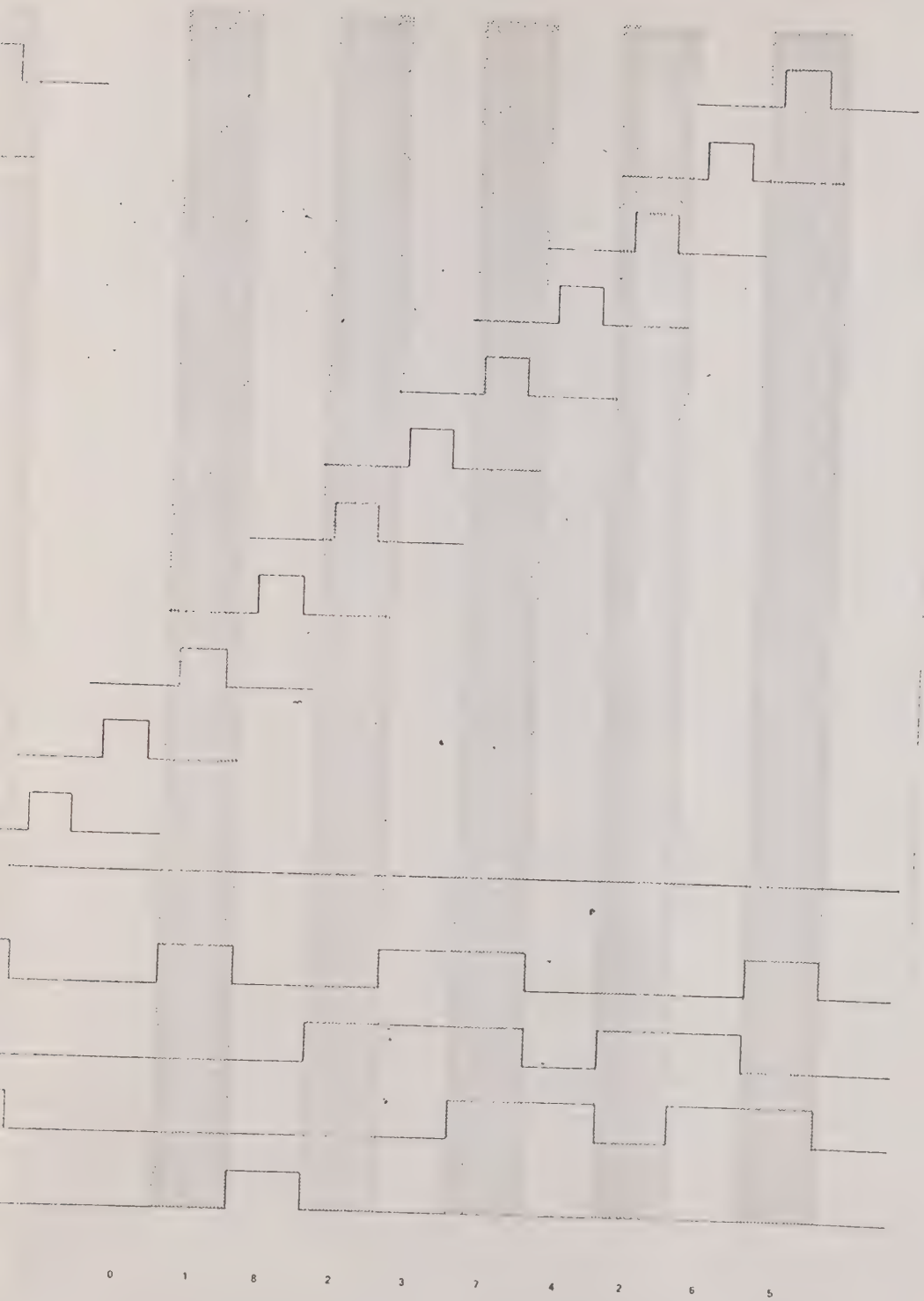

FIGURE 4.9
OPTION 09, TIMING DIAGRAM
(Sheet 4 of 4)

At the same time, a signal is sent to the frequency control board to turn off its outputs. Thus no inputs are present on pins B,C,D, and E. Pin 15 of U6 is low at this time, thereby selecting the data inputs. For the next nin intervals, the 10^9 through 10^1 data is read into the multiplexer, U6. Switch U7-6 is off, the switches on the frequency control board are on the pin 15 of U6 is low. The data sequence is controlled by the counter on the frequency control board. The output of U6 is further controlled by two signals on pins 14 and 2 and by switch U7-3. These inputs provide bit selection as controlled by the calculator chip.

TABLE 4-3 CALCULATOR SEQUENCING

COUNTER	A7U4 OUTPUT	FUNCTION
0		Input Data 10^9
1		Input Data 10^8
2		Input Data 10^7
3	Input Data 10	Input Data 10^6
4		Input Data 10^5
5		Input Data 10^4
6	Input Data 10	Input Data 10^3
7		Input Data 10^2
8	0	Input Data 10^1
9	1	Enter DIVIDE BY Code
10	2	Input Divisor
11	3	Enter EQUALS Code
12	4	Read Out Quotient
13	5	Read Out Quotient
14	6	Reset
15	7	Input Data 10^{10}

The interval following the last data interval is a command to the calculator which in effect says DIVIDE. The calculator chip then knows that the next numeric entered will be the divisor. This fixed information is supplied from A17U8-6 and inputs data bus via U7-8 when pin 2 on U4 goes low.

During the next interval, U4-3 goes low, enabling the divisor inputs to the multiplexer U6. As with the data, bit control is provided via pins 2 and 14 of U6 (L) and switch U7-3 (L).

The EQUALS command is generated during the next interval and tells the calculator to perform the division and output the quotient. Note that up until this command is executed, the output from the calculator chip is not used. When the division is complete, the interval sequencer advances and the data is strobed out of the calculator (see data output section). Data output actually occurs twice then the reset interval restarts the sequence.

SEQUENCER OPERATION

All controls for the sequencer comes from the calculator chip. Each time the calculator receives new data or commands it must be allowed whatever time is required to process the information. There is an OUTPUT CLOCK from the calculator which provides one pulse for each interval cycle and a BUSY signal which indicates the status

of the calculator. Basically, all operations start at the output clock and are considered to have been executed when the subsequent BUSY signal has been removed. Dual flip-flop U5 is used to determine this routine. Both flip-flops are reset at each BUSY signal.

The flip-flop output at pin U5-5 is the ENABLE for data input to the A17 calculator. It permits data to enter until the flip-flop is reset.

Since the BUSY appears at the same time as the OUTPUT CLOCK it is only necessary to gate these two signals such that both flip-flops are clocked the first time an OUTPUT CLOCK Pulse is present and the BUSY signal is not. This CLOCK also advances counter U3 (L). Note that during the EQUALS and READ OUT QUOTIENT intervals, the flip-flop is not permitted to activate the ENABLE. The transistor circuit on pin 12 of the logic board ensures a reset condition at initial turn-on.

U11, Q2 and Q3 form an anti lock up circuit. The output is gated by U2 with the reset high from U8-12. If no reset high is generated during counter state 14 the base of Q3 remains high and keeps Q3 off, thus UH will remain activated and will clock a pulse out to stretcher C4 and shutting off Q2. Thus a high will be gated by U2-6 to Reset the calculator.

If a Reset is generated by U4 normally, then Q3 will be turned on and the timer U11 will be shut off, preventing an automatic sequence of reset pulses from being generated.

4.3.15 Option 09 A18, Multiplier Computer D/A Converter (page

This card receives information directly from the A14, Frequency Control board and stores the tens of MHz, hundreds of MHz and ones of GHz digits in latches U2,U6, and U9. Outputs from U2 and U6 are provided and appear on the 14-pin J3 INTERCONNECT. The output from U2 (units of GHz) is also processed by U1 into a decimal format. This information, along with the tens of GHz information is used to produce the "divisor" for the calculator. Also, a signal to control the option 07 relay is provided and goes low when the selected frequency is below 2 GHz. The BCD output on B, C,H,F provides the divisor in BCD format to the A17 Multiplier Computer Logic board.

TABLE 4-4 COMPUTED DIVISORS

OUTPUT FREQUENCY (GHz)	DIVISOR
0 & 1	1
2 & 3	2
4 & 5	3
6 & 7	4
8 & 9	5
10 & 11	6
12 & 13	7
14 & 15	8
16 & 17	9
•	•
•	•
•	•
N	$\frac{2N+3+(-1)^N}{4}$

The D/A converter, U10, provides an output voltage proportional to the frequency selected. When the frequency is over 10 GHz, the circuit including U11 and U12 provides a fixed 10 volts added to the output of U10.

4.3.16 A19, REMOTE (Page

This unshielded board is in the A19 position and when properly jumpered, accepts serial as well as parallel entry of remote frequency selection data from the rear panel mounted Program, J4 50 pin connector.

PARALLEL

In the parallel mode of operation each digit is serially strobed internally by the address input calling for each BCD digit in sequence from the MSD to the LSD. U10 presents the data out when strobed by A19-1. U2 continually gates the 10^{10} digit input with each strobe pulse.

SERIAL

U7 and U4 are 4-to-1 line multiplexers which in the serial mode only are turned off by point S2 ties to ground so U3-11 drives the output control lines of U7 and U4 high. With points 1,2, and 4 grounded, the strobe line to the 8-to-1 data selectors, U8,6,5, and 3 is low, thus allowing each bit to be bussed to U10. U8 is the 1's bit, U6 is the 2's bit, U5 is the 4's bit and U3 is the 8's bit. Thus, each 4-bit word is entered in a parallel bit, serial word mode.

The 1,2,4, and 8 bits of each digit are presented simultaneously to inverters U11-2, 4,10,8. Since the 64-Bit Read/Write memory, U10, inverts the data before reading or writing, the output BCD on A19-F,S,16 and M will be the non-inverted data as read-in from J4. The Address is entered with the data. A Low injected on the A19-5 control line places U2 in the WRITE mode and the BCD word on pins U2-4,6,10 and 12 is entered into memory location specified by the address on pins U2-1,15,14, and 13. While writing, the U10 sense outputs on pins U10-5,7,9, and 11 exhibit the input data.

With a high on control line A19-5, the READ mode is selected. In this mode, U10 presents the word selected by the address on pins U10-1,15,14, and 13 on the sense output pins U2-5,7,9, and 11.

The U2, 4-Bit Bistable Latch, is the 10^{10} bit information storage and remains on for all data entry information. See Figure 4.7 for timing data input.

4.3.17 Option 06 IEEE-488 Program (1) (page

This pc card is in the A19 position when the Option 06 IEEE-488 interface has been installed. The top of the pc card contains the interface cable to the rear panel J4 PROGRAM connector. This card is used in conjunction with Option 06 IEEE-488 Program (2) card in the A13 position. Reference to the IEEE standard 488-1975 and to Chapter 3 Operation will aid in understanding the coding for this interface. Timing diagram, Figure 4.5 will aid the circuit description.

The bus is buffered as specified by the IEEE-488 standard and the signal levels are inverted by Schmitt-trigger inverters U6 and 7. The NRFD and NDAC handshake line are not inverted however. Lines not used by the 1600B are DI08, EOI and SRQ. Refer to Chapter 3 for the list of applicable subsets.

Pin U4-8 is low only when a GTL code (go to local) is decoded on the DIO lines and high otherwise.

With a low sensed, flip-flop U11-8 will be high and take the unit out of remote. The REV line is NAND gated by U14-12 with a Remote enable line from A19-N which goes high when the Model 1600B is addressed by the bus. This will trigger a low pulse from U4-4 which will make flip-flop U11-8 low and place the Model 1600B into remote. U10-3 gates the $\overline{ATN}$ line with the handshake from A13 to control the Alpha and Numeric detectors U13-8 and U13-6 respectively. The Alpha detector also presets the counter U9 with the address present on its inputs DADB DCDD. RAM U8 then reads the data into the alpha address when a READ command is presented to U8-3. The READ is cleared then U4 is clear until preset by the next alpha character. U15-8 will clock the 10^{10} bit data and U17 will store it.

After the end of the program U16-6 if flipped low and the transfer of data from U8 to U2 begins. U9-8 counter clock is strobed continuously up from 0 so the address on U8 appears on U2 in sequence while U8 is reading and U2 is writing. When binary twelve is detected by U11-3, U16 is flipped by the clear line. Pin U16-6 $\overline{Q}$ goes low and switches U3 to the B input for the third phase of remote operation. Pin U16-5, Q goes high and clocks the 10^{10} bit information out to A19-1.

The Model 1600B now addresses the A19 board on A19-T,20,21,22 and retrieves the data out on lines A19-F,S,16,M from U2. Thus, the data in the handshake program may be stored with the proper address in any order desired but the data is taken out in sequence, highest order digit first.

4.3.18 A20, Lock Indicator (page

This board is used to monitor the phase lock status of the phase/frequency discriminators, the 10 and 100 MHz VCXOs, and the status of the microwave unit. Any change from a system-locked condition will result in a front panel indication with the LOCK lamp OFF.

Diodes CR1 through CR13 receive inputs from the eleven VCO phase/frequency discriminators and CR3 receives the 10 MHz VCXO phase frequency information. Any unlock information on these diodes will appear as negative pulses which are integrated by C1 and then fed to comparator U1. Since pin U1-3 is now less than +2V, comparator U1 produces a 0V output indicating a fault. With no unlock negative pulses, the junction of C1 and R5 remains above +2 Vdc. The output then remains clamped to +5V indicating a lock condition. R2 adjusts the voltage at TP1 to +2 Vdc.

Another comparator is used to detect drift from the 100 MHz VCX. During lock a positive VCXO voltage remains on CR14 and CR15 from 2 to 8V. This voltage appears on pin U2-2 which is normally below 8 Vdc. Any voltage increases above +10.5V, due to an oscillator drift condition, will trip the comparator U2 from +5V to 0 Vdc.

Both comparator circuits are relayed to CR18 and 19 from TP4 and 5. A fault, 0 Vdc, on any one of these lines causes Q1 to turn off. This will turn on Q2 and Q3, and Q4 will be turned off. The LOCK light will turn off since it is connected to pin A20-21.

4.3.19 A21, 100 MHz Reference (page

This shielded pc board contains the 100 MHz VCXO. A 10 MHz reference is fed to phase/frequency detector, U1 from pin A21-F. This is compared with a 10 MHz frequency on pin U1-6 from the divided 100 MHz output signal. The output voltage from U4 ranges from 2 to 8 Vdc depending on the crystal oscillator. Control voltage is fed to varactor, CR1, which controls the VCXO output frequency. The VCXO, consisting of heated crystal, Y1, Transistor Q1, varicap, CR1 and associated components oscillates at 100 MHz when locked. The output frequency is fed to output rf amplifier, Q2 and to feed back amplifier Q3. Q2 feeds the output connector A21-J1 and the chassis mounted J8, 100 MHz out SMA connector on the rear panel. Q3, feeds ECL, divider U3 which divides the 100 MHz by 10. The 1 MHz output is fed to phase/frequency detector U1 and U2 provides the lock detector output on A21-L.

4.3.20 A22A1 IF Phase Detector (page

This pc board is completely encased by a metal can. Signal and power access is by jacks and feed through capacitors. The theory of operation is similar to the VCO SUM board, Opt 02 A6,A8,A10 except that the VCO is in a separate metal can, A23.

The input on A22-J3 is from the previous VCO sum, A10. The signal is then converted to TTL levels by Q4 and divided by U2 by a factor of 10. The frequency/phase discriminator U3 then receives the 1.0 to 1.9999999 or 1.9999 MHz on pin 1. Jack J2 of A22 receives the VCO output frequency from A23. U1 then subtracts the VCO output frequency from A25 on A22-J1 to arrive at an IF on pin U1-10 of 1.0 to 1.9999999 or 1.9999 MHz. The LO and RF frequencies are filtered from the IF signal by the filter between U1 and Q1. Q1,2, and 3 are an amplifier TTL converter for the input of U3-3. U3 phase detects the two signals and U4 integrates the error and produces a voltage on A22J4 for the VCO A23.

4.3.21 A23A1, VCO Buffer (page

This pc assembly is completely enclosed in a metal can with access via SMA connectors and feed through inductors. This circuit is the oscillator portion of the A22 IF Phase detector (VCO SUM) circuit. The frequency control voltage from A22-J4 is fed to A23-J1 which tunes varactors CR3 and CR4. These varactors, L4, and RF amplifier Q1 form the VCO controlled by the voltage from the phase/frequency discriminator. The VCO output is then amplified and buffered by Q2 and Q3 for outputs on J2 and J3. Pretune loop voltage enters on L2 to keep the SUM board at a voltage higher than that of the ÷N board.

4.3.22 A24, Power Supply (page

The power supply pc board is mounted on the left gusset and contains the power rectifiers and a few filter capacitors for the five unregulated voltages used to supply the regulators in the supply circuits. See Table 4.5 for voltages.

TABLE 4.5 POWER SUPPLY VOLTAGES

TRANSFORMER SECONDARY WINDING	AC VOLTAGE/PIN	RECTI-FIERS	DC VOLTAGE/PIN	FILTERS	REGULA-TORS	DC VOLTAGE/PINS
T1/RED	11.5 Vrms/8,9	CR13	+10V/10	L101,C101 C102,C103	U101 U102 U103 U104	+5V/Emitter +5V/Emitter +5V/Emitter +5V/Emitter
T1/Yellow	26.5 Vrms/11,12	CR1-4	+24V/Base +24V/Base	C1, C2 C6	U2 U105 U3	+18V/4 +15V/Emitter +8V/6
T1/Green	24 Vrms/13,14	CR5-8	-22V/17	C3	U106	-15V/Emitter
T2/Violet	36.6 Vrms/15,16	CR9-12	+33V/Base	C4, C7	U1	+24V/2

4.3.23 A25A1, Oscillator Buffer (page

This pc assembly is completely enclosed in a metal can with access via SMA connectors and feed through inductors. This circuit is the oscillator portion of the A11 VCO ÷ N circuit. The frequency control voltage from A11-U is fed to A15-J1 which tunes varactors CR3 and CR4. These varactors, L4, and RF amplifier Q1 form the VCO controlled by the voltage from the phase/frequency discriminator. The VCO output is then amplified and buffered by Q2 and Q3 for outputs on J2,J3.

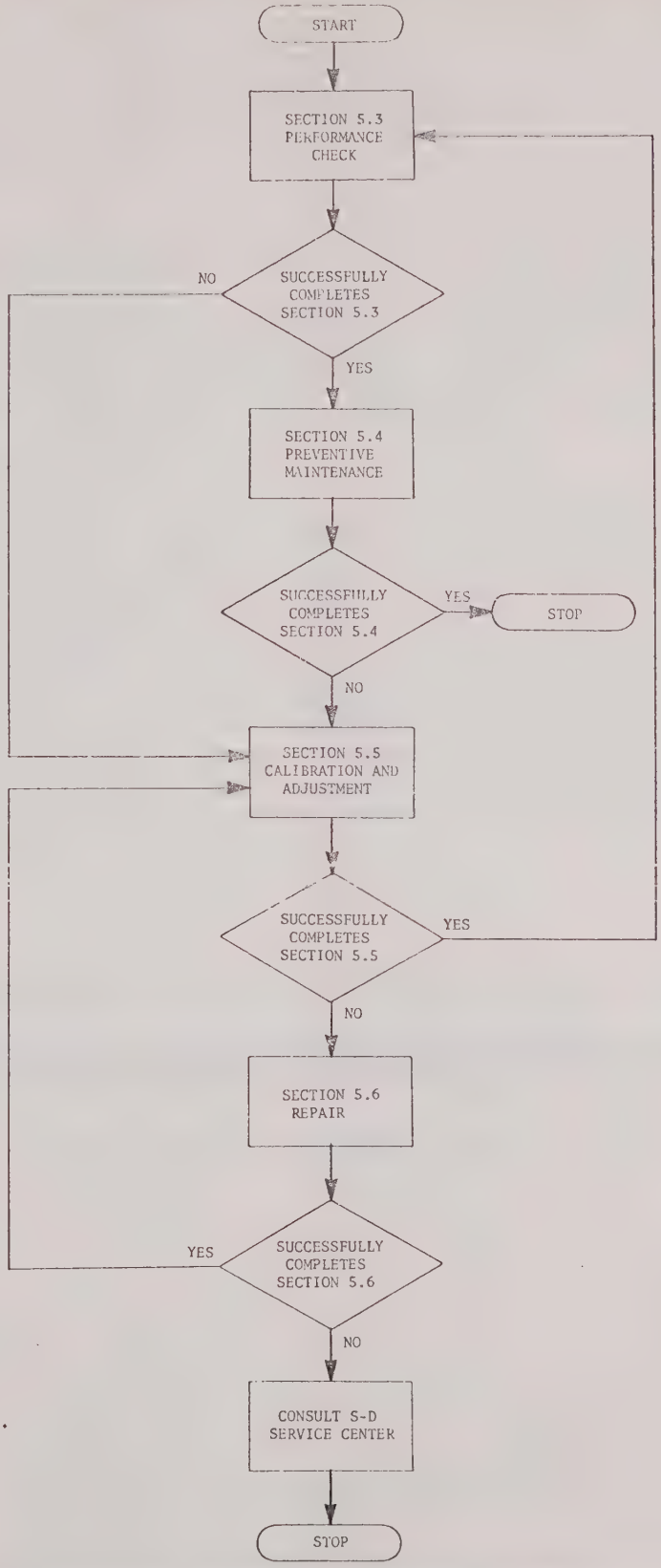

FIGURE 5.1 FLOW CHART FOR CHAPTER 5

CHAPTER 5
MAINTENANCE AND CALIBRATION

5.1 INTRODUCTION

This chapter provides preventive maintenance procedures with recommended schedules for the Model 1600B Synthesizer Driver. A list of test equipment is included for the performance check, calibration, and repair procedures. Each section in this chapter is shown in the flow diagram of Figure 5.1. Using this chart provides a systematic means of maintaining the Model 1600B. Figure 5.3 is a top view of the chassis with reference designations of the major assemblies and chassis components.

5.1.1 Access to Major Assemblies

To gain access to the major assemblies, remove the screws from the top cover and slide the cover to the rear. Removal of the plug-in assemblies for testing or repair will require lifting the extractor tabs. To remove A21, uncouple the SMA cable from the A21 Assembly and remove the two chassis bottom screws. Lift the board and shield out of the edge connector. Access to the components requires the removal of the four #6 screws from the shield. To remove A22, A23 and A25 from the chassis without disconnecting the electrical wiring, remove top and bottom covers and the right hand gusset. (See Figure 5.2.) Then remove from the bottom of the chassis the 8 screws holding A22, 23, and 25 to the chassis. Access to the components requires removal of the screws from the can covers. Table 5.1 lists the major assemblies and the page number of the applicable description and schematics for a Model 1600B with various options.

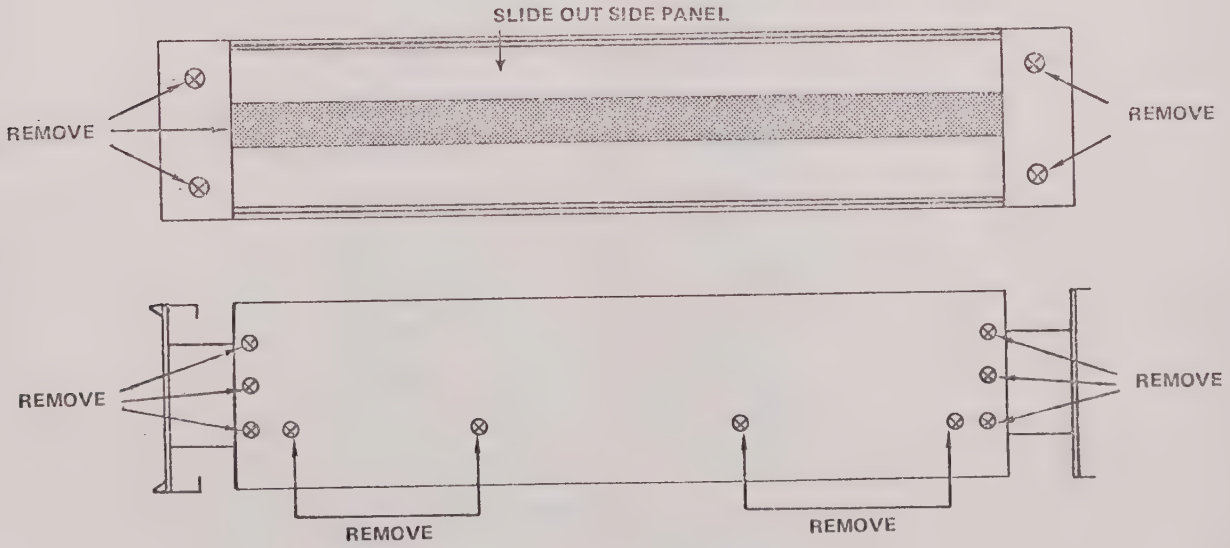

FIGURE 5-2 RIGHTHAND GUSSET REMOVAL

TABLE 5.1 MAJOR ASSEMBLIES

REFERENCE	ASSEMBLY NAME	PART NUMBER	CIRCUIT DESCRIPTION PAGE #	ASSEMBLY DRAWING PAGE #
	Test Assembly	053574		
A1	Thumbwheel Switch and Board	05314601		
Only Opt 02 A1	Thumbwheel Switch and Board	05314602		
Only Opt 09 A1	Thumbwheel Switch and Board	05314603		
Only Opt 02,09 A2	VCO ÷ N (10.0-19.9 MHz)	05310804		
Only Opt 02,09 A3	VCO ÷ N (9.9-19.8 MHz)	05310801		
Only Opt 02,09 A4	VCO SUM (100 kHz)	05350201		
Only Opt 02,09 A5	VCO ÷ N (9-18 MHz)	05310802		
Only Opt 02,09 A6	VCO SUM (1 MHz)	05350202		
Std A5	VCO ÷ N (10.0-19.9 MHz)	05310804		
A7	VCO ÷ N (9-18 MHz)	05310802		
A8	VCO SUM (1 MHz)	05350202		
A9	VCO ÷ N (9-18 MHz)	05310802		
A10	VCO SUM (1 MHz)	05350202		
A11	VCO ÷ N (9-18 MHz)	05310805		
A12	10 MHz REF	05702301		
Std A13	Remote (old)	05391901		
Opt 05 A13	Remote (old)	05391902		
Opt 06 A13	IEEE-488 (2)	05739401		
A14	Frequency Control	05392801		
Opt 05 A14	Frequency Control	05392802		
Opt 09 A14	Frequency Control	05392803		
Opt 09 & 05 A15	Frequency Control	05392804		
Opt 09 A15	Multiplier Computer Calbulator	05399201		
A16	D/A Converter	05550201		
Opt 09 A17	Multiplier Computer Logic	05393101		

TABLE 5.1 MAJOR ASSEMBLIES (Cont'd)

REFERENCE	ASSEMBLY NAME	PART NUMBER	CIRCUIT DESCRIPTION PAGE #	ASSEMBLY DRAWING PAGE #
Opt 09 A18	Multiplier Computer D/A	05392001		
A19	Remote	05741501		
Opt 05 A19	Remote	05741502		
Opt 06 A19	IEEE-488 (1)	05743001		
A20	Lock Indicator	05373301		
A21	100 MHz Reference	05732701		
A22	I.F. Phase Detector	055058		
A23	Oscillator Buffer (SUM)	055065		
A24	Power Supply	05595601		
A25	Oscillator Buffer (÷ N)	055256		

5.2 TEST EQUIPMENT

The recommended test equipment for the performance test, calibration, and repair sections of this chapter is listed in Table 5.2. Substitutions for the listed equipment may be made if the substituted equipment meets or exceeds the required characteristics.

TABLE 5.2 RECOMMENDED TEST EQUIPMENT

#	TYPE	CHARACTERISTICS	PERFORMANCE	CALIBRATION	REPAIR	RECOMMENDED INSTRUMENT
1	Oscilloscope	200 MHz B.W.				Tektronics Model 7704A
2	Digital Multimeter	.01%				S-D Model 7004A
3	Counter	200 MHz with .01 Hz resolution				S-D Model 6151
4	High Stability Reference	$<2 \times 20^{11}$/Mo.				General Technology Model 304B
5	Frequency Error Expander	Expansions to 10^3				Superior Model UC1M
6	Autotrans-former	Variable from 103V to 127 Vac				Superior Model UC1M

5.3 PERFORMANCE CHECK

The performance of the Model 1600B is checked in a microwave system. Refer to the Microwave unit manual for the proper procedure.

5.4 PREVENTIVE MAINTENANCE

The preventive maintenance on the Model 1600B is a periodic check of the loop voltages. This procedure checks for drift and aging in the VCO circuits. Section 5.2 lists the test equipment sufficient to make the necessary measurements.

5.4.1 Loop Voltage Check

Using the #2 Multimeter, measure the voltages listed in Table 5.3 and check the dynamic range listed for the VCO's. Set switches to 17.99999999 [99] GHz. (Opt 02 only)

TABLE 5.3 VOLTAGE CHECK

STEP	ASSEMBLY	VOLTAGE	MEAS. POINT	ADJ.
1	A21, 100 MHz REF	2.5 V	TP1	C8
2	A12, 10 MHz REF	1.3 to 5.0V	TP1	None
3	A20, LOCK INDICATOR	2V	TP1	R2
4	A20, LOCK INDICATOR	10.5V	TP1	R1
5	A2, VCO ÷ N	6.0V	TP1	L5
6	A3, VCO ÷ N	6.0V	TP1	L5
7	A4, VCO SUM	6.0V	TP1	L8
8	A5, VCO ÷ N	6.0V	TP1	L5
9	A6, VCO SUM	6.0V	TP1	L8
10	A7, VCO ÷ N	6.0V	TP1	L5
11	A8, VCO SUM	6.0V	TP1	L8
12	A9, VCO ÷ N	6.0V	TP1	L5
13	A10, VCO SUM	6.0V	TP1	L8
14	A25, VCO ÷ N	6.0V	TP1	L4
15	A23, VCO SUM	6.0V	TP1	L4

5.5 CALIBRATION

The only actual "calibration" adjustment for the Model 1600B Synthesizer Driver is that for the reference oscillator. The remaining adjustments and tests only serve to ensure proper operation of all phase lock circuits. Frequency accuracy is determined by the reference oscillator.

5.5.1 Oscillator Check

The following test may be used for operational checkout of the internal timebase. The Performance Data Sheet provides for recording acceptance test performance for future reference.

TIME BASE (Internal Frequency) STABILITY

1. Temperature Stability

   a. Connect the measurement system as shown in Figure 5-7 set the counter controls as follows:

TEST COUNTER	
FUNCTION	RATE A
RESOLUTION	.1 Hz
"A" ATTENUATOR	X10
"A" AC-DC	AC
"A" LEVEL	PRESET
FAST-SLOW	SLOW
RECYCLE RATE	Full Clockwise
TEST	Off

   b. Place Model 1600B to be tested in a temperature-controlled environment.

   c. Stabilize counter at 25°C ambient for 72 hours.

   d. Calibrate the Model 1600B oscillator to the frequency standard by adjusting the coarse and fine adjust, as required, to produce a reading of 1000000.0 Hz, ±10 counts. The least significant digit represents one part in 10^{10}. Record the absolute value obtained as a reference frequency.

   e. Lower the temperature to 0°C and allow 3.5 hours to stabilize. Record observed frequency. Elevate the temperature to +50°C and allow 3.5 hours to stabilize. Record observed frequency. Lower the temperature to 25°C and allow to stabilize.

2. Line-Voltage Stability:

   a. Set line voltage of the Model 1600B to 115 Vrms with variable-voltage ac source while maintaining a stable environment. Record observed frequency. Raise line voltage to 127.5 Vrms and record observed frequency.

3. Long-Term Stability:

   a. Maintain constant environment and line voltage. Be certain that the Model 1600B has been allowed 72 hours to stabilize. Record reference frequency. Record frequency 24 hours later.

The oscillator is the only component in the instrument requiring routine calibration in order to maintain best a-curacy and performance. A periodic check-out/adjustment of oscillator frequency is a requirement for normal operation, and especially when high accuracy is demanded.

When calibration is required, be sure that the instrument has been "on" and operating for 72 hours continuously.

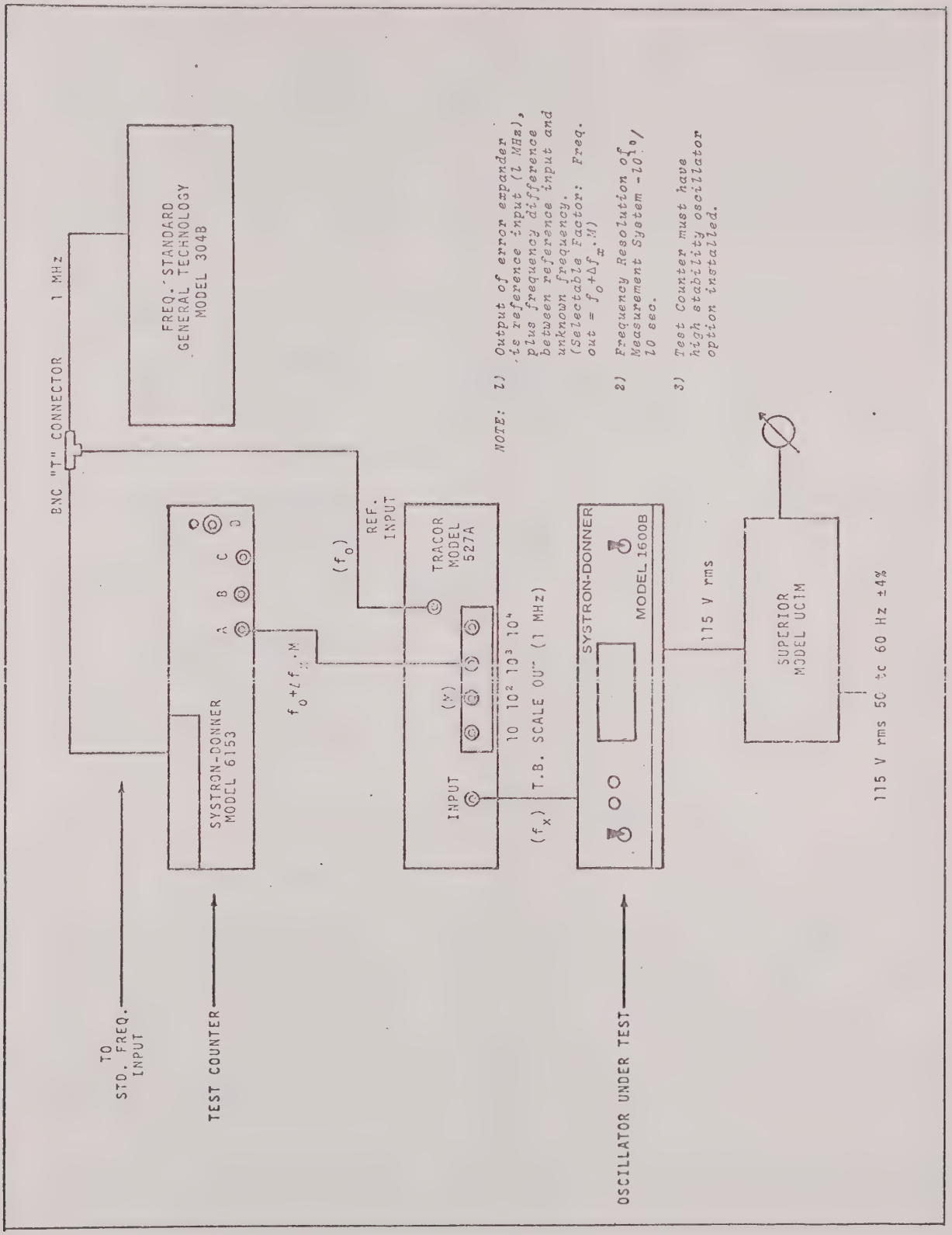

FIGURE 5-4 TIME BASE TEMPERATURE STABILITY CHECK

TIME BASE ADJUSTMENT

1. Connect the test frequency standard (traceable to N.B.S.) to the external trigger input of the oscilloscope. Connect the 10 MHz OUTput J7 to the input of the oscilloscope. Set the horizontal sweep rate to 10 ns.

2. Adjust the oscillator, as required to produce a stationary waveform.

3. If the waveform moves at a rate of 1 centimeter per second, the two frequencies are within ±1 part in 10^8 of each other. A rate of 1 centimeter per 10 second period indicates that the two frequencies are within ±1 part in 10^9 of each other.

TIME BASE PERFORMANCE DATA

1. Temperature Stability (±2 X 10^{10}/°C from 0°C to +50°C):

Reference frequency	1.000000.0 ±10
0°C frequency	Reference ±50 counts
+50°C frequency	Reference ±50 counts

2. Line Voltage (±5 x 10^{10} for a 10% line change):

Reference frequency	
-10% line (103.5 Vac)	Reference ±5 counts
+10% line (127.5 Vac)	Reference ±5 counts

3. Long-term stability (±3 X 10^9/24 hours):

Reference frequency	
24 hours later	Reference ±10 counts

5.5.2 Phase Lock Adjustments

NOTE

Adjustments should be done in the order given, following 30 minute warmup.

Step 1. A12, 10 MHz Reference

Set the rear panel INT/EXT slide switch to INT. Measure the voltage of TP1, accessible through a hole in the top of the shield. The value should be between +1.3 and +5.0V. If not, a defective component exists on the board. Monitor the rear panel 1 MHz OUT BNC connector with the #3 counter. The output should be 1 MHz ±counter accuracy ±Model 1600B oscillator accuracy.

Set the rear panel INT/EXT slide switch to EXT 1 MHz and connect the #4, 1 MHz frequency standard to the REF IN BNC connector. Measure the voltage on TP1 as before, noting the voltage to be within +1.3 and +5.0V.

Set the rear panel INT/EXT slide switch to EXT 5 MHz and connect the #4, 5 MHz frequency standard to the REF IN BNC connector. Measure the voltage on TP1 as before, noting the voltage to be within +1.3 and +5.0V.

Step 2. A21, 100 MHz Reference

Measure the voltage at TP1, accessible through a hole in the top of the shield, the voltage should be 2.5V. If not, correct and remove the two #6 screws holding the shield ends to the chassis and lift up the assembly. Place on an extender card and adjust C8 through a hole in the side of the shield to achieve 2.5V. Turn very slowly. If the voltage is below 1V and appears to move very little, monitor TP1 with a scope. A positive going "hump" should be present. (This is the unlocked condition). Adjust C8 slowly to increase the size of the "hump". When lock is achieved, a DC level will be present.

Monitor the 100 MHz OUT SMA connector on the rear panel with the #3 counter. The time base of the counter should be connected to the Model 1600B 1 MHz OUT BNC. The display should read 100 MHz 1 count.

Monitor the 100 MHz OUT SMA connector on the rear panel with the #1 oscilloscope (50Ω load). The output should be 2V p-p minimum.

Step 3. A20, Lock Indicator

Monitor TP1. The voltage should be +2.0 Vdc. If not, adjust R2. Monitor TP2. The voltage should be +10.5 Vdc. If not, adjust R1.

For a standard Model 1600B continue at step 7. If configured with Option 02, continue at step 4.; If Option 09 is installed go to step 15.

Step 4. A2, VCO ÷ N (10.0-19.9 MHz)

Set the 1 and 10 Hz switches to 9 (99 Hz). Monitor A2 TP1 with the #2 DVM, and pin A2-Y with the #3 counter. Adjust L5 for +6.0 Vdc. Verify the frequency out on pin A2-Y is 19.9 MHz.

Set the 1 and 10 Hz switched to 0 (00 Hz). The voltage at TP1 must be +2.5V ±.3 Vdc. The frequency on pin A2-Y should be 10.0 MHz.

Step 5. A3, VCO ÷ N (9.9-19.8 MHz)

Set the 100 Hz and 1 kHz switches to 9, (9900 Hz). Monitor A3 TP1 with the #2, DVM and pin A3-Y with the #3, counter. Adjust L5 for +6.0 Vdc. Verify that the frequency on pin A3-Y is 19.8 MHz.

Step 6. A4, VCO SUM (100 kHz)

Set the 1 Hz, 10 Hz, 100 Hz, and 1 kHz switches to 9, (9999 Hz). Monitor A4 TP1 with the #2 DVM and pin A4-Y with the #3 counter. Adjust L8 for +6.0 Vdc. Verify that the frequency on pin A4-Y is 19.999 MHz.

Leaving the "positive" lead of the DVM on A4 TP1 connect the "negative" lead to A3 TP1. Select 0 to 9 on the 1 kHz switch. The voltage should vary from +.6 to -1.2 Vdc. If the voltage deviates out side this range, adjust L5 on A3 and/or L8 on A4. The #3 counter should read 10.999 to 19.999 on pin A4-Y.

Step 6. A4, VCO SUM (100 kHz) (Cont'd)

Set the 1, 10, and 100 Hz switches to 0, 000 Hz. Set 0 to 9 on the 1 kHz switch. The voltage should vary from +0.6 to -1.2 Vdc. If the voltage deviates outside this range, readjust L5 on A3 and/or L8 on A4. The #3 counter should read 10.000 to 19.000 MHz. If either coil is adjusted repeat procedures from the second paragraph of step 6. until all readings are in tolerance.

Step 7. A5, VCO ÷ N (9-18 MHz)

Set the 10 kHz switch to 9, and if not option 02 or 09, set the 1 kHz switch to 9. Monitor A6 TP1 with the #2 DVM and pin A5-Y with the #3 counter. Adjust L5 for +6.0 Vdc. The counter should read 18.0 MHz. (19.9 MHz without option 02 or 09).

Step 8. A6, VCO SUM (1 MHz)

Set the 10 kHz and lower switches to 9. Monitor A6 TP1 with the #2 DVM and pin A6-Y with the #3 counter. Adjust L8 for +6.0 Vdc. The counter should read 19.9999 MHz.

Leaving the "positive" lead of the #2 DVM on A6 TP1 connect the "negative" lead to A5 TP1. Select 0 to 9 on the 10 kHz switch. The voltage will vary from +0.6 to -1.2 Vdc. If the voltage deviates outside this range, adjust L5 on A5 and L8 on A6. The counter should read 10.9999 to 19.9999 MHz.

Set the 1 Hz, 10 Hz, 100 Hz and 1 kHz switches to 0. Select 0 to 9 on the 10 kHz switch. The voltage read on the #3 DVM will vary from +0.6 to -1.2 Vdc. If the voltage deviates outside this range, readjust L5 on A5 and/or L8 on A6. The counter should read 10.0000 to 19.0000 MHz. If either coil is adjusted, repeat the second and third paragraphs of step 8. until all readings are within tolerance.

Step 9. A7, VCO ÷ N (9-18 MHz)

Set the 100 kHz switch to 9 (900,000 Hz). Monitor A7 TP1 with the #2 DVM and pin A7-Y with the #3 counter. Adjust L5 for +6.0 Vdc. The counter should read 18.0 MHz.

Step 10. A8, VCO SUM (1 MHz)

Monitor A8 TP1 with the #2 DVM and pin A8-Y with the #3 counter. Adjust L8 for +6.0 Vdc. The counter display will be 19.99999.

Leaving the "positive" lead of the #2 DVM on A8 TP1 connect the "negative" lead to A7 TP1. Select 0 to 9 on the 100 kHz switch. The voltage will vary from +0.6 to -1.2 Vdc. If the voltage deviates outside this range, readjust L5 on A7 and L8 on A8. The counter should read from 10.99999 to 19.99999 MHz.

Set the 10 kHz and lower switches to 0. Select 0 to 9 on the 100 kHz switch. The voltage will vary from +0.6 to -1.2 Vdc. If the voltage deviates outside this range, readjust L5 on A7 and/or L8 on A8. The counter should read 10.00000 to 19.00000 MHz. If either coil is adjusted, repeat the second and third paragraphs in step 10.

Step 11. A9, VCO ÷ N (9-18 MHz)

Set the 1 MHz switch to 9 (9000000 Hz). Monitor A9 TP1 with the #2 DVM and pin A9-Y with the #3 counter. Adjust L5 for 6.0 Vdc. The counter should read 18.0 MHz.

Step 12. A10, VCO SUM (1 MHz)

Set the 1 MHz and lower switches to 9. Monitor A10 TP1 with the #2 DVM and pin A10-Y with the #3 counter. Adjust L8 for +6.0 Vdc. The counter should display 19.999999 MHz.

Leaving the "positive" lead of the #3 DVM on A10 TP1, connect the "negative" lead to A9 TP1. Select 0 to 9 on the 1 MHz switch. The voltage will vary within +0.6 to -1.2 Vdc. If the voltage deviates outside this range, readjust L5 on A9 and/or L8 on A10. The counter should read from 10.999999 to 19.999999 MHz

Set the 100 kHz and lower switches to 0. Select 0 to 9 on the 1 MHz switch. The voltage will vary from +0.6 to -1.2 Vdc. If the voltage deviates out of this range, readjust L5 on A9 and/or L8 on A10. The #3 counter should read 10.000000 to 19.000000 MHz. If either coil is adjusted repeat the second and third paragraphs in step 12.

Step 13. A11, VCO ÷ N, A25 (10-19 MHz)

Set the 10 MHz and lower switches to 9. (99,999,999 MHz). Monitor pin A11-U with the #3 DVM and pin A11-Y with the counter. Adjust A25-L4 for +6.0 Vdc. The counter should read 18.0 MHz.

Step 14. A23, VCO SUM (11-21 MHz)

Set the 1 MHz and lower switches to 9. (9,999,999 Hz). Monitor the "LOOP IN" connector with the #3 DVM and the rear panel 11-21 MHz OUTPUT BNC with the #2 counter. Adjust A23-L4 for +6.0 Vdc. Verify that the output is 20.9999999 MHz.

Leaving the "positive" lead of the #3 DVM on the A23, "LOOP IN" point connect the negative lead to the A25 "LOOP IN" point. Select 0-9 on the 10 MHz switch. The voltage is allowed to vary from +1.0 to -1.0 Vdc. If the voltage exceeds these limits, adjust L4 on A25 and/or L4 on A23. The counter should read 11.9999999 to 20.9999999 MHz.

Set 1 MHz and lower switches to 0. Select 0-9 on the 10 MHz switch. The voltage is allowed to vary from +1.0 to -1.0 Vdc. If the voltage exceeds these limits, readjust L4 on A25 and/or L4 on A23. The counter should read from 11.0000000 to 20.0000000 MHz. If either coil is adjusted, repeat the second and third paragraphs of step 14. until all readings are in tolerance. Proceed with the Oscillator Amplitude Tests in section 5.5.3.

Step 15. Option 09 Special Instructions

Instruments equipped with Option 09 should be tested with the procedure for option 02 except for the following:

The two most significant digits must be set to 01 GHz at all times.

A2 requires the following special procedure. With an option 09 installed, the output of A2 always contains paired digits, i.e. 10.0, 11.1, 12.2, 13.3 MHz, etc. Also, no direct control of these digits from the frequency select switches is possible. The Multiplier Computer, however, will control these digits when computing the output frequency.

Momentarily set the frequency control switches for 17.999999999GHz. Monitor A2 TP1 with the #3 DVM and pin A2-Y with the #2 counter. Adjust L5 for +6.0 Vdc. Verify the counter displays 18.8 MHz. Now, follow the standard procedure starting with step 5. Set 01 GHz on the switches.

5.5.3 Oscillator Amplitude Tests (All Configurations)

Set a frequency of 01.000000000 GHz. Using the # oscilloscope measure pins A2-Y through A9-Y for a minimum amplitude of 1.0V p-p. Note, pin A11-Y may be .5V p-p. Using a 50Ω termination on the oscilloscope monitor the rear panel 11-21 MHz OUT BNC. Select 0 to 4 on the 10 MHz switch and verify that the output is at least 0.5V p-p.

5.5.4 Lock Indicator Tests

With no external reference connected switch to EXT 1 MHz, the front panel LOCK lamp should go off. Return to INT. Momentarily ground the cathode of either tuning diode (CR1 or CR2) of A2. The LOCK indicator should go out while the short is applied. Repeat the grounding procedure for A3 through A10,23 and 25.

If the LOCK lamp does not come on when the short is removed, turn the ac power off then on.

5.5.5 A16, Converter Tests

Monitor pin A16-16 with the #3 DVM. Set all zeros on the Frequency switches. Adjust A16R4 for 0.000V ±1 mV. For non option 09 units, set in 9 GHz. Adjust A16R8 for +9.000V ±1 mV. With option 09 set in 1.9 GHz. Adjust A16R8 for 1.900V ±1 mV. Vary the Frequency switches from 0 to 9.9 GHz (non option 09) or 0 to 1.9 GHZ (option 09) and verify that the output voltage tracks the setting within ±3 mV.

5.5.6 Option 09 A18, Multiplier Computer D/A Tests

Monitor pin A18-Y with the #3 DVM. Set 0 GHz on the Frequency switches. Adjust A18R16 for 0.000V ±1 mV. Select 9 GHz and adjust A18R11 for +4.500V ±1 mV. Select 10 GHz and adjust A18R12 for +5.000V ±1 mV. Set 0 to 9 on the 10 MHz switch and verify the voltage changes ~5 mV for each step. Set 0 to 9 in the 100 MHz switch and verify the voltage changes 50 mV ±2 mV for each step. Set 0 to 18 GHz and verify the voltage tracks the setting to within ±5 mV. Voltage out equals one half the dial setting.

5.5.7 J3, Interconnect Tests

Verify that each pin in the Table has the proper signal.

TABLE 5.4 J3, PIN CHECK

PIN	FUNCTION
1	Ground
2	D/A output
4	10 GHz bit (low for 10)
5	Multiplier Computer D/A (Option 09 only)
8	8 Bit, 1 GHz digit, TTL + True
9	4 Bit, 1 GHz digit, TTL + True
10	8 Bit, 100 MHz digit, TTL + True
11	4 Bit, 100 MHz digit, TTL + True
15	Lock indicator input from 160X
18	1-2 GHz control, TTL (low >2 GHz) (Option 09 only)
20	2 Bit, 1 GHz digit, TTL + True
21	1 Bit, 1 GHz digit, TTL + True
22	2 Bit, 100 MHz digit, TTL + True
23	1 Bit, 100 MHz digit, TTL + True
24	Ground

5.6 REPAIR

To correct a major failure in the Model 1600B involves locating the trouble and repairing the faulty section. Locating the difficulty will best be aided by the use of the circuit description in Chapter 4, the drawings in Chapter 7, and the trouble location information in Figure 5. . Circuit board repair and component descriptions are included in this section to aid the repair procedure. Referring to Chapter 6 will allow part identification if replacement is necessary.

5.6.1 Troubleshooting

By using Figure 5. , most of the major faults may be isolated. The checks called out will require the use of test equipment listed in Table 5.1.

5.6.2 Circuit Board Repair

When replacing integrated circuits or other electronic components soldered to printed-circuit boards, the procedures indicated below must be followed or damage to the board may result:

1. Determine by troubleshooting techniques, which integrated circuit or discrete component has failed.

2. Remove the defective component(s) from the board by cutting the pins or leads with a small diagonal clipping tool. (Always remove and replace the entire component.)

3. Apply heat (40-50W soldering iron) sparingly to each of the cut pins or leads and remove from the board; clean the hole(s) with a toothpick or solder suction tool.

4. Form the tinned leads of the replacement part and insert in the printed circuit holes; solder, then trim leads to extend 1/16-inch beyond the back surface of the board. (Use only 63-37 solder with maximum 1/16-inch diameter.)

CAUTION

CLEANING SOLVENTS MAY DAMAGE ALUMINUM ELECTROLYTIC CAPACITORS.

Aluminum electrolytic capacitors are inherently susceptible to attack by haolgenated hydrocarbon solvents. Industry standards, such as EIA RS-395 and Military Specification MIL-C-39018, caution against their use. Specifications of many major O.E.M. customers specifically forbid the use of halogenated cleaning materials on aluminum electrolytic capacitors.

However, some users will clean printed circuit boards carring aluminum electrolytic capacitors with trichloroethylene, Freon, or other halogenated solvents. A bath in any of these cleaning or degreasing compounds can create serious problems. Should these solvents seep into electrolytic capscitors around their seals, they will attack the internal section and the resultant corrosion will cause the capacitors to fail after a few months.

Compounds containing halogenated hydrocarbon solvents are popular because of their effective cleaning properties and the ease and safety with which they can be handled. Customers may therefore insist on subjecting aluminum electrolytic capacitors to cleaning in these materials. When this situation exists, the customer should order special units with a supplemental epoxy barrier over the end discs or headers.

As an alternate to the special units, customers should consider inserting electrolytic capacitors on their wiring boards after the boards have been subjected to cleaning with whatever halogenated solvent they may wish to use.

5.6.3 Major Component Data

The major components in the Model 1600B are described in this section to aid in troubleshooting and repairing the unit. Components not described in this section can be characterized by referring to the manufacturers catalog. Table 5.4 lists TTL, ECL and MOS devices used in the Model 1600B. A few linear components are also included.

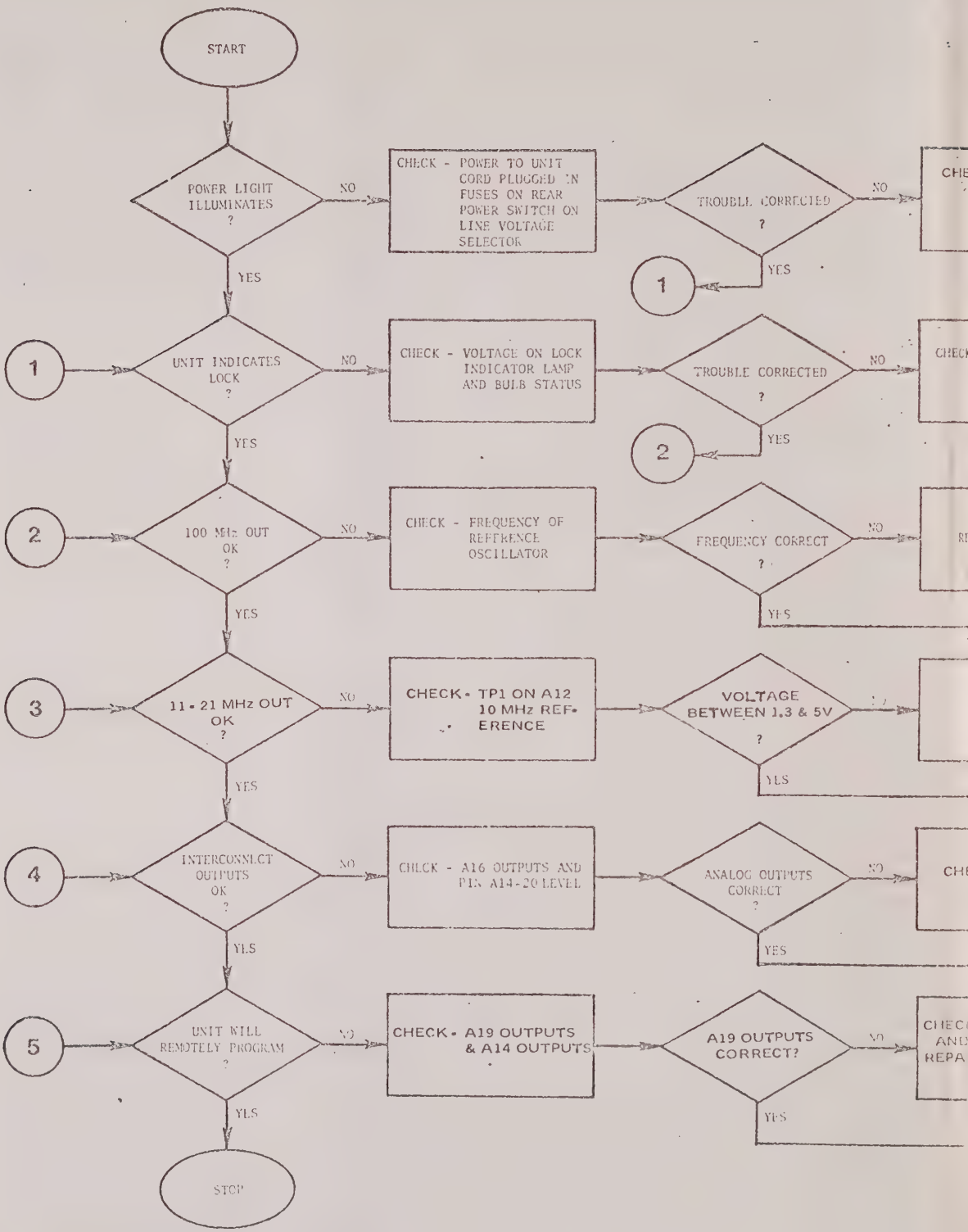
START
POWER LIGHT ILLUMINATES ?
NO
CHECK - POWER TO UNIT CORD PLUGGED IN FUSES ON REAR POWER SWITCH ON LINE VOLTAGE SELECTOR
TROUBLE CORRECTED ?
NO
YES
1
YES
1
UNIT INDICATES LOCK ?
NO
CHECK - VOLTAGE ON LOCK INDICATOR LAMP AND BULB STATUS
TROUBLE CORRECTED ?
NO
YES
2
YES
2
100 MHz OUT OK ?
NO
CHECK - FREQUENCY OF REFERENCE OSCILLATOR
FREQUENCY CORRECT ?
NO
YES
YES
3
11 - 21 MHz OUT OK ?
NO
CHECK - TP1 ON A12 10 MHz REFERENCE
VOLTAGE BETWEEN 1,3 & 5V ?
YES
YES
4
INTERCONNECT OUTPUTS OK ?
NO
CHECK - A16 OUTPUTS AND PIN A14-20 LEVEL
ANALOG OUTPUTS CORRECT ?
NO
YES
YES
5
UNIT WILL REMOTELY PROGRAM ?
NO
CHECK - A19 OUTPUTS & A14 OUTPUTS
A19 OUTPUTS CORRECT?
NO
YES
YES
STOP

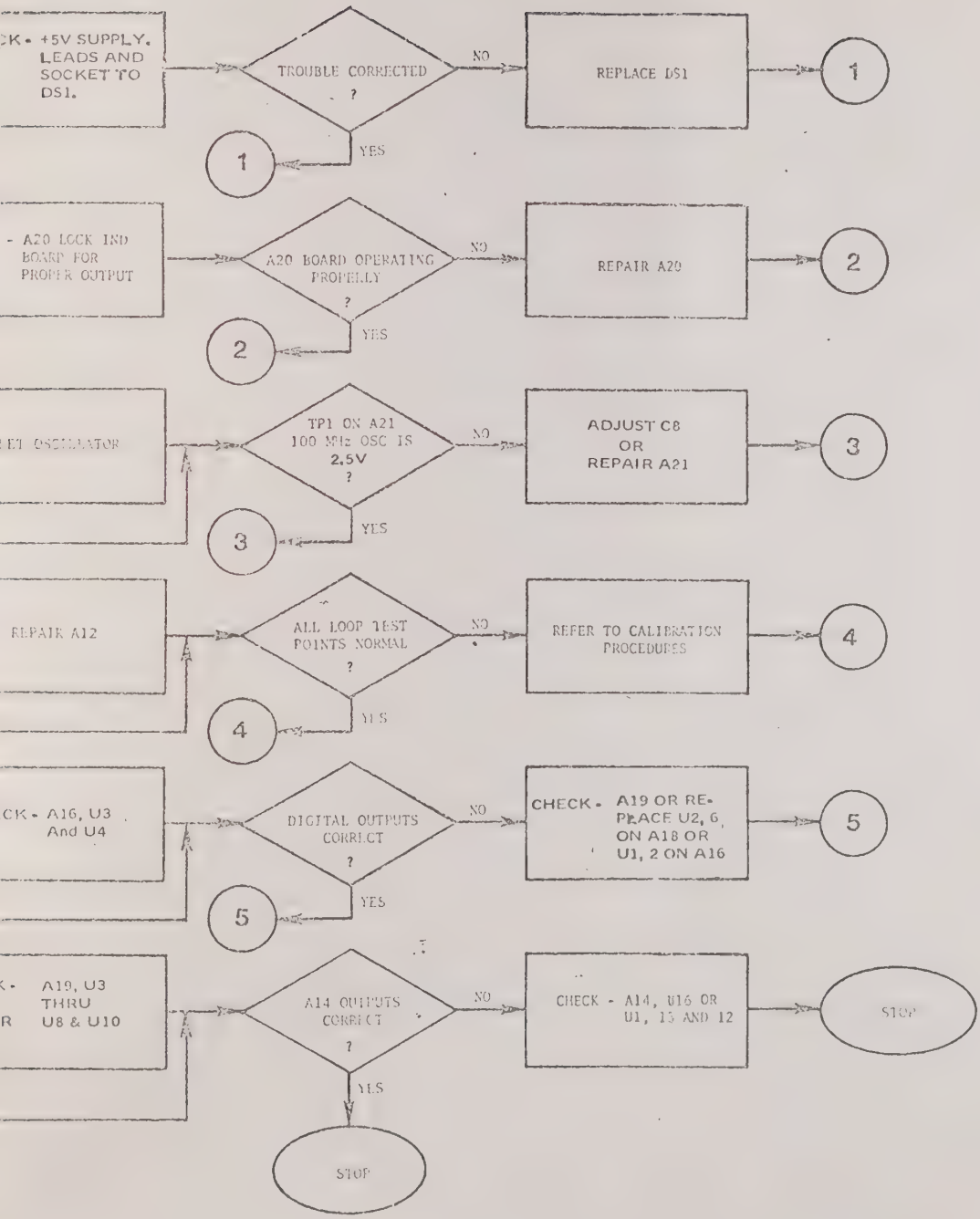

FIGURE 5.5 FAULT ISOLATION DIAGRAM

TABLE 5.5 COMPONENT DESCRIPTION PAGE LOCATION

COMPONENT	S-D PART NO.	PAGE
AD563JD/BCD	103838	5-18
CA3130T	103231	5-24
DKV651B (Sel.)	053437	5-27
KV1701	100452	5-28
LF356H	103701	5-29
LM201AH	025758	5-30
LM301AH	025745	5-31
LM309K	025787	5-32
LM320K-15	045293	5-33
MC300P	025766	5-34
MC3001P	025740	5-35
MC3002P	025739	5-35
MC3003P	025767	5-36
MC3021P	025789	5-36
MC4016P	045237	5-37
MC4024P	045206	5-38
MC4044P	045238	5-39
MC10131L	045239	5-40
MC12014L	045263	5-41
MC12040L	045277	5-42
MC14010CP	045285	5-43
MC14013CP	103199	5-44
MC14028CP	045286	5-45
MC14510CP	045287	5-46
MC14519CP	045288	5-47
MDA970-1	103976	5-48
MFE121	101413	5-49
MV2103	100433	5-50
NE555V	045208	5-51
SMV1157	100462	5-53
SN15846N	019716	5-54
SN7400N	019705	5-55
SN74LS00N	103130	5-55
SN74L03N	019709	5-55
SN7404N	025779	5-55
SN74LS04N	103749	5-55
SN7408N	103093	5-56
SN74LS08N	103967	5-56
SN7409N	103321	5-56
SN74LS01N	103968	5-56
SN7414N	117078	5-57
SN7417N	106629	5-57
SN7420N	025713	5-57
SN74LS20N	103969	5-57
SN7425N	045296	5-58
SN74LS30N	103971	5-58
SN7432N	045217	5-58
SN74LS32N	103972	5-58
SN7442N	025749	5-59
SN74LS42N	103131	5-59

TABLE 5.5 COMPONENT DESCRIPTION PAGE LOCATION (Cont'd)

COMPONENT	S-D PART NO.	PAGE
SN7473N	045247	5-61
SN7474N	025241	5-61
SN74LS74N	103132	5-61
SN74L75N	045201	5-62
SN7489N	103219	5-63
SN7490N	025732	5-64
SN7493N	025715	5-65
SN74123N	045209	5-67
SN74LS123N	103976	5-67
SN74126N	045298	5-69
SN74145N	025745	5-70
SN74157N	045242	5-71
SN74L157N	103270	5-71
SN74LS192N	103106	5-72
SN74196N	025784	5-73
SN74LS197N	103165	5-73
SN74LS251N	103220	5-75
SN74LS253N	103221	5-76
SN76514L	045235	5-77
TMS0117NC	103322	5-78
7808UC	045265	5-90
7815KC	045282	5-90
7824UC	045246	5-90
7818UC	045294	5-90
93L24PC	117020	5-92
053377	053377	5-94
OSC.033428	03342801	5-95
OSC.1344	053535	5-96

PRODUCT DESCRIPTION

The AD563 is an integrated circuit 12-bit digital-to-analog converter consisting of a specially designed precision bipolar switch and control amplifier chip, a compatible high stability silicon chromium thin film resistor chip, and a low drift, voltage reference chip. The three I.C. chips are internally connected and mounted in a hermetically-sealed, ceramic 24 lead dual-in-line package to produce a self contained current output DAC.

A unique combination of advanced circuit design, high stability SiCr thin film resistor processing and laser trimming technology, provides the AD563 with true 12-bit accuracy. The maximum error at +25°C is limited to ¼LSB (K, S and T versions) with the gain temperature coefficient limited to 10ppm/°C max, including the effects of the internal reference. Monotonicity on all versions is guaranteed over the full operating temperature range.

The AD563 is recommended for all high accuracy 12-bit D/A converter applications where true 12-bit performance is required, but low cost and small size are considerations. The AD563 is also ideal for use in constructing A/D conversion systems and as a building block for higher resolution D/A systems. The AD563J and K are specified for operation over the 0 to +70°C temperature range, the AD563S and T for operation over the military temperature range, -55°C to +125°C.

PRODUCT HIGHLIGHTS

1. The AD563 is a self-contained current output DAC including voltage reference.
2. True 12-bit resolution is achieved with guaranteed monotonicity over the full operating temperature range. Voltage outputs are easily implemented by using an external operational amplifier and the AD563's internally provided feedback resistors.
3. The device incorporates a newly developed* and fully differential, non-saturating precision current switching cell structure which provides increased immunity to supply voltage variation and also reduces non-linearities due to thermal transients as the various bits are switched; nearly all critical components operate at constant power dissipation.
4. The thin film resistor network contains gain range and bipolar offset resistors so that various output voltage ranges can be programmed by changing connections to the device terminal leads. Thin film resistors are laser trimmed while the device is powered to calibrate all scale factors. The scale factors are dependent upon the tracking (less than 2ppm/°C) of these resistors, rather than upon their absolute temperature coefficients.
5. TTL or CMOS inputs can be accommodated for supply voltages from +5V to +15V.
6. Positive true logic eliminates the need for additional inverter components.

*Patent Pending

AD563JD/BCD S-D P/N 103838

SPECIFICATIONS (T_A = +25°C, unless otherwise specified)

MODEL	AD563J		
	MIN	TYP	MAX
DATA INPUTS			
TTL, V_{cc} = +5V, Pin 2			
Open Circuit			
Bit ON Logic "1"	+2.0		
Bit OFF Logic "0"			+0.8
CMOS, 4.75 ≤V_{cc} ≤15.8,			
Pin 2 tied to Pin 1			
Bit ON Logic "1"	70%V_{cc}		
Bit OFF Logic "0"			30%V_{cc}
Logic Current (each bit)			
Bit ON Logic "1"		+20	+100
Bit OFF Logic "0"		-50	-100
OUTPUT			
Current			
Unipolar	-1.7	-2.0	-2.3
Bipolar	±0.85	±1.0	±1.15
Resistance (exclusive of			
span resistors)	5.3k	6.6k	7.9k
Unipolar Zero (all bits OFF)		0.01	0.05
Capacitance		33	
Compliance Voltage		-1.5 to +10	
RESOLUTION		12 Bits	
ACCURACY (Error relative to full scale)			±½ (0.012)
DIFFERENTIAL NONLINEARITY			±½
SETTLING TIME TO ½LSB			
All Bits ON-to-OFF or			
OFF-to-ON		1.2	
POWER REQUIREMENTS			
V_{cc}, +4.75 to +15.8VDC		15	20
V_{ee}, -15VDC ±5%		20	25
POWER SUPPLY GAIN SENSITIVITY			
V_{cc} @ +5VDC		3	10
V_{cc} @ +15VDC		3	10
V_{ee} @ -15VDC		14	25
TEMPERATURE RANGE			
Operating		0 to +70	
Storage		-65 to +150	
TEMPERATURE COEFFICIENT			
With Internal Reference			
Unipolar Zero		1	2
Bipolar Zero			10
Gain			30
Differential Nonlinearity		2	
MONOTONICITY		Guaranteed over full operating temp. range	
EXTERNAL ADJUSTMENTS*			
Gain error with fixed 10Ω resistor		±0.1	
Bipolar Zero Error with Fixed			
10Ω resistor		±0.1	
Gain Adjustment Range		±0.25	
Binary Bipolar Zero Adjustments			
Range		±0.25	
BCD Bipolar Offset Adjustment			
Range		±0.17	

AD563JD/BCD S-D P/N 103838

SPECIFICATIONS (Cont'd)

PROGRAMMABLE OUTPUT RANGES (See Figs. 1a, 1b)		0 to +5 -2.5 to +2.5 0 to +10 -5 to +5 -10 to +10	
REFERENCE INPUT			
Input Impedance		5k	
REFERENCE OUTPUT			
Voltage	2.425	2.500	2.575
Current			5
Impedance		1	

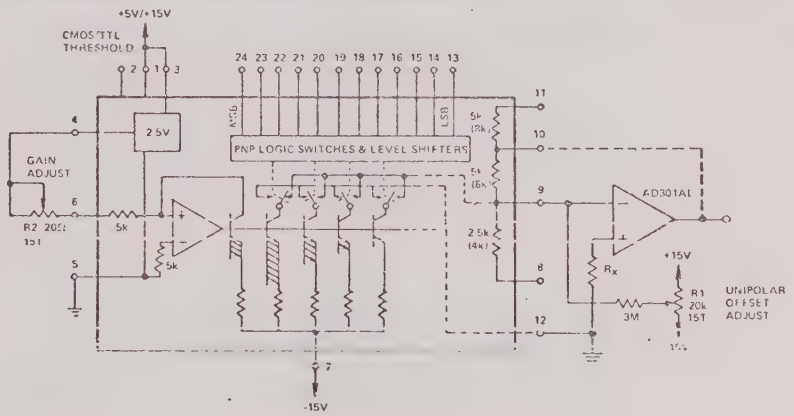

Figure 1a. AD563 in Typical Unipolar Connection Scheme

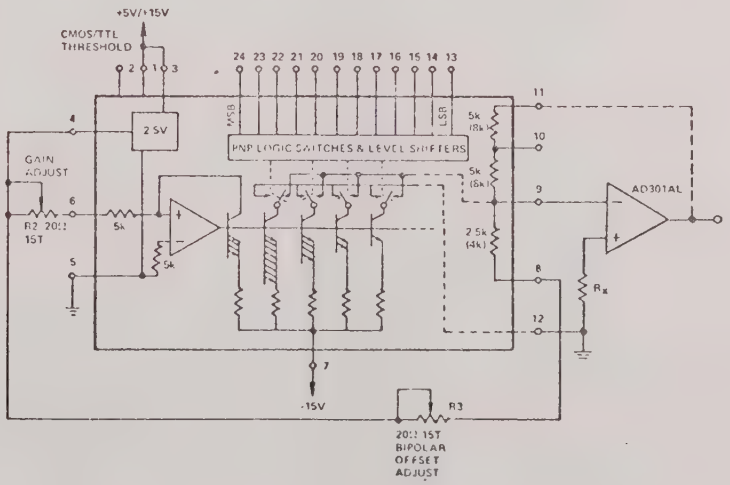

Figure 1b. AD563 in Typical Bipolar Connection Scheme

NOTE 1
- A. FOR TTL AND DTL COMPATIBILITY, CONNECT +5 VOLTS TO PIN 1 AND LEAVE PIN 2 OPEN.
- B. FOR LOW VOLTAGE CMOS COMPATIBILITY, CONNECT +5 VOLTS TO PIN 1 AND SHORT PIN 2 TO PIN 1.
- C. FOR HIGH VOLTAGE CMOS COMPATIBILITY, CONNECT +15 VOLTS TO PIN 1 AND SHORT PIN 2 TO PIN 1.

NOTE 2. RESISTOR VALUES IN PARENTHESES ARE FOR BCD MODEL.
NOTE 3. SUPPLIES MAY BE BYPASSED WITH 0.1μF CAPACITORS
NOTE 4. IN UNIPOLAR OPERATION R_x SHOULD BE MADE EQUAL TO THE PARALLEL COMBINATION OF THE INTERNAL FEEDBACK RESISTOR AND 6.6k. IN BIPOLAR, R_x EQUALS THE FEEDBACK RESISTOR IN PARALLEL WITH 1.8k.

CIRCUIT DESCRIPTION

Referring to Figure 2, operation of the AD563 is as follows: the control amplifier drives the bases of all the constant current transistors in parallel. These transistors have binarily scaled emitter areas so that they are operated at a constant-current density and, thus, nearly equal h_{FE} and V_{BE}. The control amplifier also drives a reference transistor pair, $Q_1 - Q_2$, which has h_{FE} and V_{BE} characteristics closely matching those of the constant-current and bit switching transistors. A gain trim is connected between the internal, 2.5V voltage reference and control amplifier input resistor, R_1, to establish the reference input current. (0.5mA F.S.) The high gain control circuit amplifies the difference between this reference current and that in the collector of Q_1 and establishes the constant-current transistor base voltage E_B to null this error, that is, to force Q_1 collector current equal to the reference input current. Because of the close match between the reference transistor pair and the various constant current and differential switch pairs, variations in h_{FE} and V_{BE} with temperature are sensed in the reference transistor pair. The control loop then forces a variation in E_B to hold Q_1 collector current — and therefore each of the switched bit currents — constant in the presence of these variations.

Use of the reference transistor and control loop therefore reduces the gain temperature coefficient to a function of differential h_{FE} and V_{BE} between the bit and reference transistors. Because of the extremely close matching of these parameters, the AD563 achieves an overall gain temperature coefficient as low as 10ppm/°C, including the effects of the low drift voltage reference.

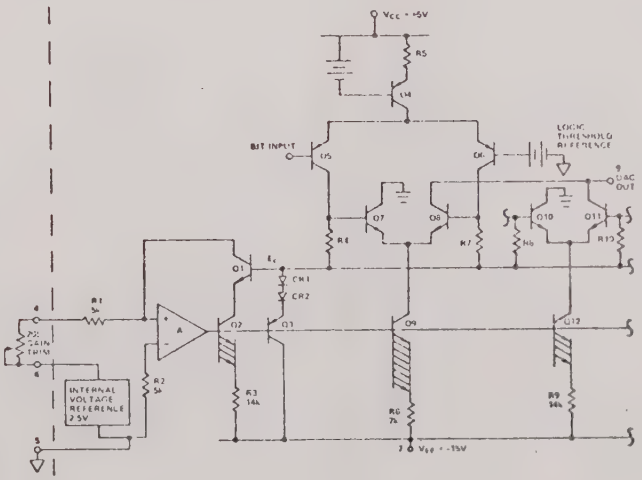

Figure 2. Control Amplifier and Bit Setting Cell Structure

One should note that V_{BE} mismatch among the output current switching transistors (Q8, Q11, etc.) does not introduce bit weighting errors, since these transistors are cascode-connected to each of their respective constant-current source transistors. Since the collector voltage of the constant-current transistors does not change during bit switching, there is no differential power change in these transistors as various bit combinations are switched. Moreover, the four MSB constant-current transistors are located on the axis of symmetry between each of their respective differential switch pairs. As a consequence, the device is virtually free from nonlinearity and thermal transient errors attributed to differential heating effects.

Referring to Figure 3, currents for bits 1, 2, 3 and 4 are 1mA, ½mA, ¼mA and 1/8mA. Bits 5, 6, 7 and 8 current source transistors also operate at 1mA, ½mA, ¼mA and 1/8mA, but their current transfer to the current output bus is attenuated by a factor of 16 (10 for BCD) via R20 and R21. Bits 9, 10, 11 and 12 constant current transistors operate at ½mA, ¼mA, 1/8mA and 1/16mA, respectively, or half that of their counterparts in quads 1 and 2. Current transfer from the third quad to the output current bus is attenuated by a factor of 128 (50 for BCD) via R22 and R23.

Transistor Q13 is matched to Q12 and provides a current equal to that in Q12 to properly terminate the R/2R network. Transistors Q12 and Q13 are mismatched in emitter areas by 2:1 from the other constant-current transistors. The V_{BE} for these transistors is therefore about 20mV lower than that of these other transistors. The value of R14 is increased from its 14 kilohm nominal value by 160 ohms to establish the bit 12 current at its correct value (1/8mA x 160Ω = 20mV). (The differential gain T.C. introduced by this 2:1 area mismatch is negligibly small, since it is introduced at the LSB level.)

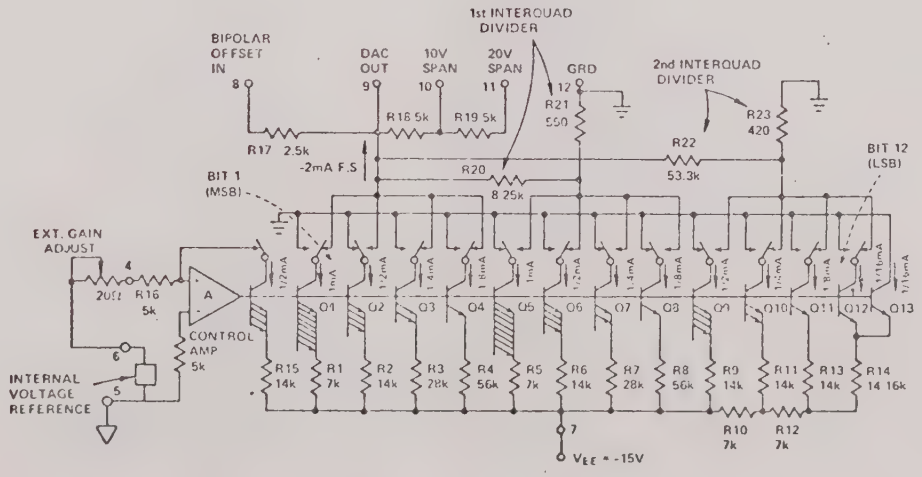

Figure 3. Ladder Network and Inter-Quad Divider Current Scaling

AD563JD/BCD S-D P/N 103838

THE AD563 OFFERS TRUE 12-BIT RESOLUTION OVER FULL TEMPERATURE RANGE

ACCURACY: Analog Devices defines accuracy as the maximum deviation of the actual DAC output from the ideal analog output (a straight line drawn from 0 to F.S. – 1LSB) *for any bit combination*. The AD563, for example, is laser trimmed to ¼LSB (0.006% of F.S.) maximum error at +25°C for K, S and T versions . . . ½LSB for the J version.

MONOTONICITY: A DAC is said to be monotonic if the output either increases or remains constant for increasing digital inputs such that the output will always be a single-valued function of the input. All versions of the AD563 are monotonic over their full operating temperature range.

DIFFERENTIAL NONLINEARITY: Monotonic behavior requires that the differential nonlinearity error be less than 1LSB both at 25°C and over the temperature range of interest. Differential nonlinearity is the measure of the variation in analog value, normalized to full scale, associated with a one LSB change in digital input code. For example, for a 10 volt full-scale output, a change of one LSB in the digital input code should result in a 2.4mV change in the analog output (10V x 1/4096 = 2.4mV). If in actual use, however, a one LSB change in the input code results in a change of 1.3mV in analog output, the differential nonlinearity would be 1.1mV, or 0.011% of F.S.

The differential nonlinearity temperature coefficient must also be considered if the device is to remain monotonic over its full operating temperature range. A differential nonlinearity temperature coefficient of 1ppm/°C could, under worst case conditions for a temperature change of +25°C to +125°C, add 0.01% (100°C x 1ppm/°C) of error. The resulting error could then be as much as 0.006% + 0.01% = 0.016% of F.S. (1LSB represents 0.024% of F.S.). All versions of the AD563 are 100% tested to be monotonic over the full operating temperature range.

PIN CONFIGURATION

24 LEAD DUAL IN-LINE PACKAGE

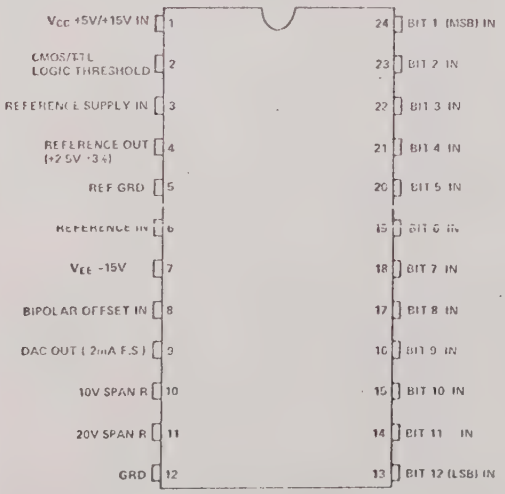

TOP VIEW

APPLICATIONS CONSIDERATIONS

Operation with ±15V Power Supplies

The AD563 operates with a negative supply, V_{EE} = -15V, ±5% and a positive supply +4.75V ≤ V_{CC} ≤ +15.8V (depending on the use of either TTL or CMOS input logic levels). The internal reference is normally powered by shorting pin 3 to pin 1 since the reference maintains its rated +2.5V output for supplies from +4.5V to +30V.

When TTL compatibility is required, (V_{CC} = +5V) and only +15V supplies are available, the circuit of Figure 4 may be utilized. The 2.37kΩ resistor placed from pin 2 to ground drops the logic threshold to accommodate TTL inputs.

CA3130T S-D P/N 103231

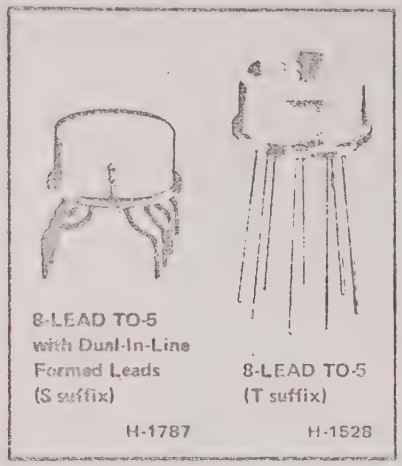

8-LEAD TO-5 with Dual-In-Line Formed Leads (S suffix) H-1787

8-LEAD TO-5 (T suffix) H-1528

COS/MOS Operational Amplifiers

With MOS/FET Input

Features:

- MOS/FET input stage provides:
  very high Z_I = 1.5 TΩ (1.5 x 10^{12} Ω) typ.
  very low I_I = 5 pA typ. at 15 V operation
  2 pA typ. at 5 V operation
- Common-mode input-voltage range includes negative supply rail; input terminals can be swung 0.5 V below negative supply rail
- COS/MOS output stage permits signal swing to either (or both) supply rails

} Ideal for single-supply applications

- Low V_{IO}: 2 mV max. (CA3130B)
- Wide BW: 15 MHz typ. (unity-gain crossover)
- High SR: 10 V/μs typ. (unity-gain follower)
- High output current (I_O): 20 mA typ.
- High A_{OL}: 320,000 (110 dB) typ.
- Compensation with single external capacitor

Applications:

- Ground-referenced single-supply amplifiers
- Fast sample-hold amplifiers
- Long-duration timers/monostables
- High-input-impedance comparators
  (ideal interface with digital COS/MOS)
- High-input-impedance wideband amplifiers
- Voltage followers
  (e.g., follower for single-supply D/A converter)
- Voltage regulators
  (permits control of output voltage down to zero volts)
- Peak detectors
- Single-supply full-wave precision rectifiers
- Photo-diode sensor amplifiers

RCA-CA3130T, CA3130S, CA3130AT, CA3130AS, CA-3130BT, and CA3130BS are integrated-circuit operational amplifiers that combine the advantages of both COS/MOS and bipolar transistors on a monolithic chip.

Gate-protected p-channel MOS/FET (PMOS) transistors are used in the input circuit to provide very-high-input impedance, very-low-input current, and exceptional speed performance. The use of PMOS field-effect transistors in the input stage results in common-mode input-voltage capability down to 0.5 volt below the negative-supply terminal, an important attribute in single-supply applications.

A complementary-symmetry MOS (COS/MOS) transistor pair, capable of swinging the output voltage to within millivolts of either supply-voltage terminal (at very high values of load impedance), is employed as the output circuit.

The CA3130 Series circuits operate at supply voltages ranging from 5 to 16 volts, or ±2.5 to ±8 volts when using split supplies. They can be phase compensated with a single external capacitor, and have terminals for adjustment of offset voltage for applications requiring offset-null capability. Terminal provisions are also made to permit strobing of the output stage.

The CA3130 Series is supplied in either the standard 8-lead TO-5-style package (T suffix) or in the 8-lead dual-in-line formed-lead TO-5-style package "DIL-CAN" (S suffix) and operates over the full military-temperature range of −55°C to +125°C. The CA3130B is intended for applications requiring premium-grade specifications and with limits established for: input current, temperature coefficient of input-offset voltage, and gain over the range of −55°C to +125°C. The CA3130A offers superior input characteristics over those of the CA3130.

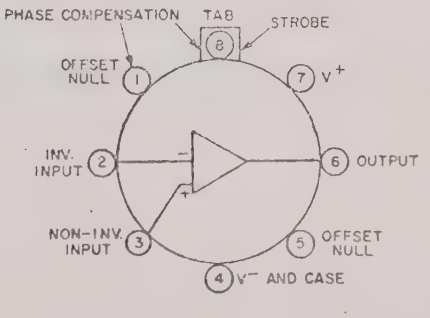

Fig. 1—Functional diagram of the CA3130 Series.

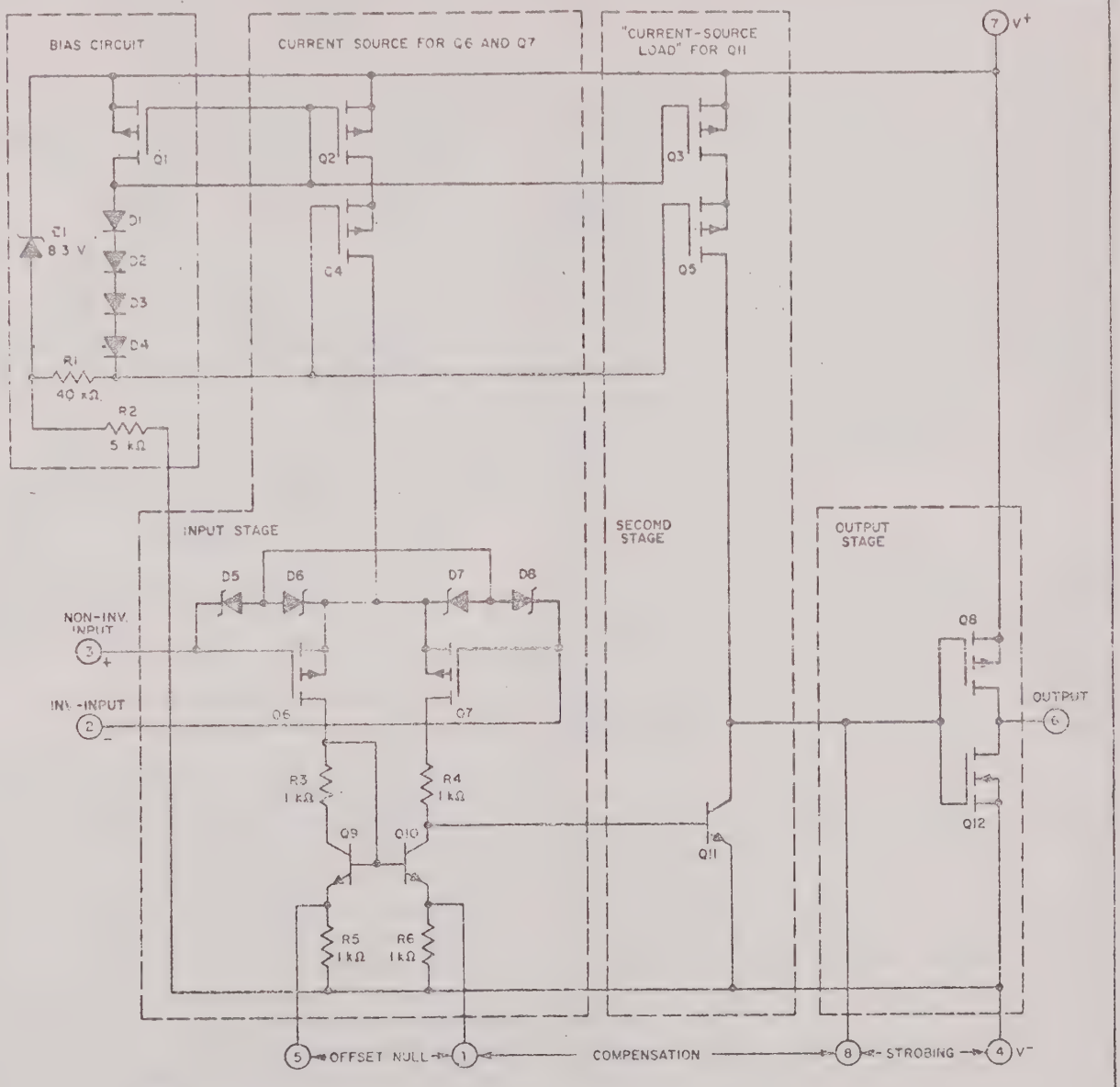

NOTE:
DIODES D5 THROUGH D8 PROVIDE GATE-OXIDE PROTECTION FOR MOS/FET INPUT STAGE.

Fig. 2—Schematic diagram of the CA3130 Series.

CA3130T

S-D P/N 103231

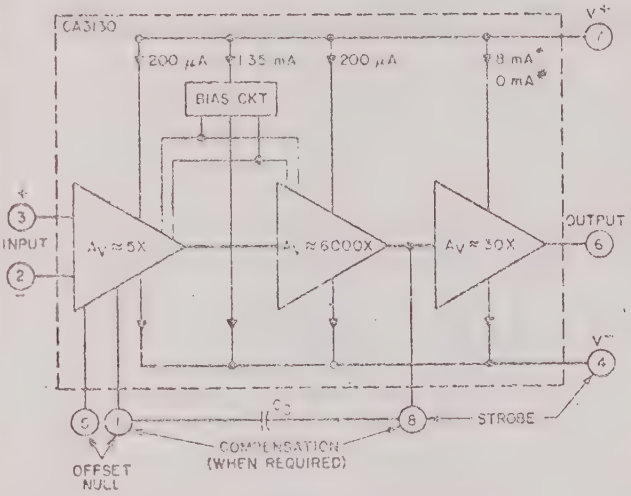

TOTAL SUPPLY VOLTAGE (FOR INDICATED VOLTAGE GAINS) = 15 V
*WITH INPUT TERMINALS BIASED SO THAT TERM. 6 POTENTIAL IS +7.5 V ABOVE TERM. 4.
**WITH OUTPUT TERMINAL DRIVEN TO EITHER SUPPLY RAIL.

92CS-24715

Fig. 3—Block diagram of the CA3130 Series.

transistors Q2, Q4 are the constant-current source for the input stage. The biasing circuit for the constant-current source is subsequently described. The small diodes D5 through D8 provide gate-oxide protection against high-voltage transients, e.g. including static electricity during handling for Q6 and Q7.

Second Stage—Most of the voltage gain in the CA3130 is provided by the second amplifier stage, consisting of bipolar transistor Q11 and its cascode-connected load resistance provided by PMOS transistors Q3 and Q5. The source of bias potentials for these PMOS transistors is subsequently described. Miller-Effect compensation (roll-off) is accomplished by simply connecting a small capacitor between Terms. 1 and 8. A 47-picofarad capacitor provides sufficient compensation for stable unity-gain operation in most applications.

Bias-Source Circuit—At total supply voltages, somewhat above 8.3 volts, resistor R2 and zener diode Z1 serve to establish a voltage of 8.3 volts across the series-connected circuit, consisting of resistor R1, diodes D1 through D4, and PMOS transistor Q1. A tap at the junction of resistor R1 and diode D4 provides a gate-bias potential of about 4.5 volts for PMOS transistors Q4 and Q5 with respect to Term. 7. A potential of about 2.2 volts is developed across diode-connected PMOS transistor Q1 with respect to Term. 7 to provide gate bias for PMOS transistors Q2 and Q3. It should be noted that Q1 is "mirror-connected"† to both Q2 and Q3. Since transistors Q1, Q2, Q3 are designed to be identical, the approximately 200-microampere current in Q1 establishes a similar current in Q2 and Q3 as constant-current sources for both the first and second amplifier stages, respectively.

At total supply voltages somewhat less than 8.3 volts, zener diode Z1 becomes non-conductive and the potential, developed across series-connected R1, D1-D4, and Q1, varies directly with variations in supply voltage. Consequently, the gate bias for Q4, Q5 and Q2, Q3 varies in accordance with supply voltage variations. This variation results in deterioration of the power-supply-rejection ratio (PSRR) at total supply voltages below 8.3 volts. Operation at total supply voltages below about 4.5 volts results in seriously degraded performance.

Output Stage—The output stage consists of a drain-loaded inverting amplifier using COS/MOS transistors operating in the Class A mode. When operating into very high resistance loads, the output can be swung within millivolts of either supply rail. Because the output stage is a drain-loaded amplifier, its gain is dependent upon the load impedance. The transfer characteristics of the output stage for a load returned to the negative supply rail are shown in Fig. 6. Typical op-amp loads are readily driven by the output stage. Because large-signal excursions are non-linear, requiring feedback for good waveform reproduction, transient delays may be encountered. As a voltage follower, the amplifier can achieve 0.01 per cent accuracy levels, including the negative supply rail.

DKV6517B S-D P/N 053437

GLASS PACKAGE TUNING VARACTORS DKV–6510 SERIES

HYPERABRUPT ION-IMPLANTED MEDIUM-TO-HIGH FREQUENCY VOLTAGE VARIABLE CAPACITANCE DIODES, VERY LARGE CAPACITANCE RATIO, MEDIUM Q

GENERAL DESCRIPTION:

ION IMPLANTATION enables Alpha to supply this series of hyperabrupt tuning diodes with closely controlled characteristics. The highly reproducible capacitance versus voltage behavior of this family permits Alpha to supply matched sets and also assures the customer of a long-term availability of parts having uniform electrical properties. Passivated, hermetically sealed construction allows their use under the most adverse conditions.

DESIGNER ORIENTED families offer types selected and tested with each customers application in mind. Premium units DKV-6515B through -6518B tune up to 30 MHz with frequency ratios as high as 4 to 1, and can be used up to 300 MHz in oscillators. Alpha's DKV-6515A through -6518A diodes tune over 4 to 1 frequency ratios up to 10 MHz and are also ideal for wide deviation voltage-tuned crystal oscillators. The DKV-6515 through -6518 series are suited to applications where economy is a prime consideration, and may be used as replacements for devices which are not ion-implanted with, in most cases, performance advantages. Low frequency oscillators, voltage-tuned filters, VCXO/TCXO modules, and frequency/phase modulators using Alpha's DKV-6510 series achieve new levels of frequency swing and linearity.

ABSOLUTE MAXIMUM RATINGS:

SYMBOL	PARAMETER	VALUE	UNIT
V_R	Reverse Voltage	Same as V_{BR}	
I_F	Forward Current	50	mAdc
P_D	Power Dissipation (T_A=25°C)	250	mW
T_J	Junction Temperature	–55 to +125	°C
T_{stg}	Storage Temperature	–55 to +175	°C

HF diodes: These hyperabrupt VVC's are for tuning LC resonant circuits from audio frequencies up to 30 MHz with frequency ratios as high as 4 to 1; also for wide deviation voltage-tuned crystal oscillators. They are ion-implanted to give superior uniformity. Two volt capacitances from 125 to 350 pF are offered in this designer-oriented family. HF diodes feature exceptionally large capacitance ratios, very high Q, straight-line-frequency performance over a 1.5 to 4 volt tuning range, and are available in closely matched sets.

- KV1501, KV1601, KV1701, KV1801 for HF tuning where high Q is required.
- KV1502, KV1602, KV1702, KV1802 for medium-frequency tuning applications.
- KV1503, KV1603, KV1703, KV1803 for economy applications.

ABSOLUTE MAXIMUM RATINGS
(HF, VHF, UHF)

Symbol	Parameter	Value	Unit
V_R	Reverse Voltage	Same as V_{BR}	
I_F	Forward Current	200	mAdc
Pd	Power Dissipation (T_A = 25 ° C)	250	mW
TI	Junction Temp.	-65 to +125	°C
TStg	Storage Temp.	-65 to +175	°C

HF Tuner Diodes — Electrical Characteristics (T_A = 25°C)

	CT DIODE CAPACITANCE (pF) f = 1 MHz				TR TUNING RATIO f = 1 MHz		Q		V_{BR} (Vdc)	I_R (nAdc)	
							V_R = 2 Vdc		I_R = 10μAdc	V_R = 10 Vdc	
TYPE	V_R = 1.25 Vdc MIN/TYP/MAX	V_R = 2 Vdc MIN/TYP/MAX	V_R = 7 Vdc MIN/TYP/MAX	V_R = 10 Vdc MIN/TYP/MAX	C(1.25V)/C(7V) MIN/TYP/MAX	C(2V)/C(10V) MIN/TYP/MAX	f = 1 MHz MIN/TYP	f = 10 MHz MIN/TYP	MIN/TYP	TYP/MAX	PACKAGE
KV1501	– /180/ –	100/125/150	– /13/ –	8.6/9.6/10.6	– /14/ –	10/13/17.5	–	50/130	12/20	10/50	DO-7
KV1502	– /180/ –	100/125/150	– /13/ –	8.6/9.6/10.6	– /14/ –	10/13/17.5	250/500	–	12/20	50/100	DO-7
KV1503	– /180/ –	100/125/ –	– /13/ –	– /9.6/10.6	– /14/ –	10/13/ –	200/500	–	12/20	100/1000	DO-7
KV1601	– /255/ –	140/175/210	– /18.5/ –	12.6/14.0/15.4	– /14/ –	10/12.5/17	–	50/120	12/20	10/50	DO-7
KV1602	– /255/ –	140/175/210	– /18.5/ –	12.6/14.0/15.4	– /14/ –	10/12.5/17	200/500	–	12/20	50/100	DO-7
KV1603	– /255/ –	140/175/ –	– /18.5/ –	– /14.0/15.4	– /14/ –	10/12.5/ –	200/500	–	12/20	100/1000	DO-7
KV1701	– /225/ –	160/225/270	– /24/ –	16.2/18.0/19.8	– /14/ –	10/12.5/17	–	60/115	12/20	10/50	DO-7

LF356H S-D P/N 103701

general description

The LF156 is the first monolithic JFET input operational amplifier to incorporate well-matched, high voltage JFETs on the same chip with standard bipolar transistors. The amplifier features low input bias and offset currents, low offset voltage and offset voltage drift, coupled with offset adjust which does not degrade drift or common-mode rejection. The device was also designed for high slew rate, wide bandwidth, extremely fast settling time, low voltage and current noise and a low 1/f noise corner.

features

- Low input current — 30 pA
- Low offset voltage — 3 mV
- Guaranteed offset voltage drift — 5μV/°C
- Low input noise voltage — 12 nV/√Hz
- Low 1/f noise corner — < 100 Hz
- Wide bandwidth — 5 mHz
- Fast slew rate — 15V/μs
- Fast settling to 0.01% — 1.4μs
- Internally compensated
- Stable with large capacitive loads
- Operates from standard op amp supplies

applications

- Precision high speed integrators
- Sample and hold circuits
- Fast D/A and A/D converters
- Low noise amplifiers for high impedance transducers
- Wideband low noise, low drift amplifiers
- High impedance buffers
- High frequency, high impedance active filters

connection diagram

Metal Can Package

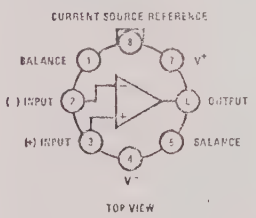

TOP VIEW

LM201AH

S-D P/N 025758

The LM101A and LM201A are general purpose operational amplifiers which feature improved performance over industry standards like the LM101 and the 709. Advanced processing techniques make possible an order of magnitude reduction in input currents, and a redesign of the biasing circuitry reduces the temperature drift of input current. Improved specifications include:

- Offset voltage 3 mV maximum over temperature
- Input current 100 nA maximum over temperature
- Offset current 20 nA maximum over temperature
- Guaranteed drift characteristics
- Offsets guaranteed over entire common mode and supply voltage ranges
- Slew rate of 10V/μs as a summing amplifier

This amplifier offers many features which make its application nearly foolproof: overload protection on the input and output, no latch-up when the common mode range is exceeded, freedom from oscillations and compensation with a single 30 pF capacitor. It has advantages over internally compensated amplifiers in that the frequency compensation can be tailored to the particular application. For example, in low frequency circuits it can be overcompensated for increased stability margin. Or the compensation can be optimized to give more than a factor of ten improvement in high frequency performance for most applications.

The LM101A series offers the features of the LM101, which makes its application nearly foolproof. In addition, the device provides better accuracy and lower noise in high impedance circuitry. The low input currents also make it particularly well suited for long interval integrators or timers, sample and hold circuits and low frequency waveform generators. Further, replacing circuits where matched transistor pairs buffer the inputs of conventional IC op amps, it can give lower offset voltage and drift at a lower cost.

The LM201A is identical to the LM101A, except that the LM201A has its performance guaranteed over a −25°C to 85°C temperature range, instead of −55°C to 125°C.

schematic** and connection diagrams

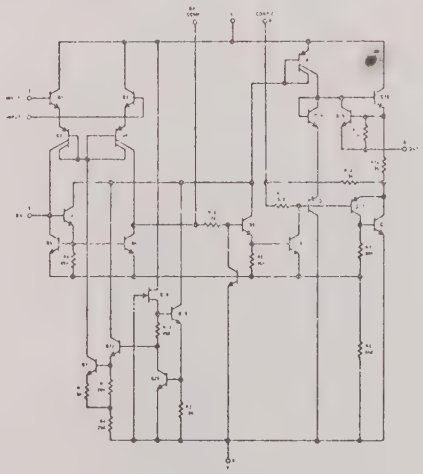

Metal Can

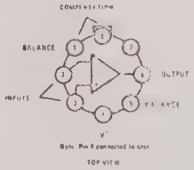

Order Number
LM101AH or LM201AH
See Package 11

Flat Package

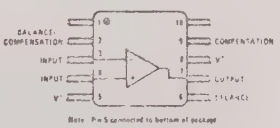

Order Number
LM101AF or LM201AF
See Package 3

Dual-In-Line

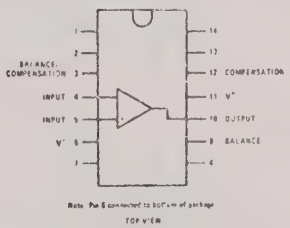

Order Number LM101AD or LM201AD
See Package 1

Previously copyrighted material. Reprinted with permission from National, Motorola, Signetics, and Texas Instruments.

LM301AH S-D P/N 025745

Operational Amplifier

general description

The LM301A is a general-purpose operational amplifier which features improved performance over the 709C and other popular amplifiers. Advanced processing techniques make possible an order of magnitude reduction in input currents, and a redesign of the biasing circuitry reduces the temperature drift of input current.

This amplifier offers many features which make its application nearly foolproof: overload protection on the input and output, no latch-up when the common mode range is exceeded, freedom from oscillations and compensation with a single 30 pF capacitor. It has advantages over internally compensated amplifiers in that the compensation can be tailored to the particular application. For example, as a summing amplifier, slew rates of 10 V/μs and bandwidths of 10 MHz can be realized. In addition, the circuit can be used as a comparator with differential inputs up to ±30V; and the output can be clamped at any desired level to make it compatible with logic circuits.

The LM301A provides better accuracy and lower noise than its predecessors in high impedance circuitry. The low input currents also make it particularly well suited for long interval integrators or timers, sample and hold circuits and low frequency waveform generators. Further, replacing circuits where matched transistor pairs buffer the inputs of conventional IC op amps, it can give lower offset voltage and drift at reduced cost.

schematic** and connection diagrams

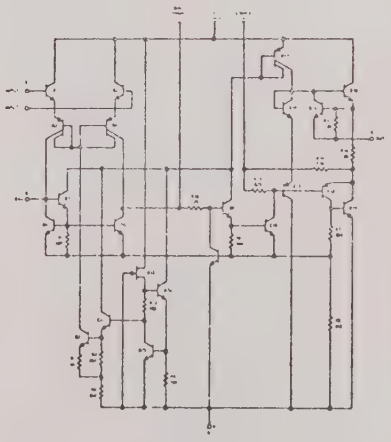

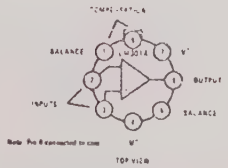

Order Number LM301AH
See Package 11

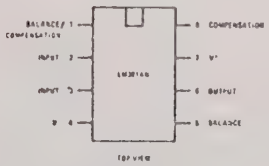

Order Number LM301AN
See Package 20

LM309K
Five-Volt Regulator

S-D P/N 025787

general description

The LM309 is a complete 5V regulator fabricated on a single silicon chip. It is designed for local regulation on digital logic cards, eliminating the distribution problems associated with single-point regulation. The device is available in two common transistor packages. In the solid-kovar TO-5 header, it can deliver output currents in excess of 200 mA, if adequate heat sinking is provided. With the TO-3 power package, the available output current is greater than 1A.

The regulator is essentially blow-out proof. Current limiting is included to limit the peak output current to a safe value. In addition, thermal shutdown is provided to keep the IC from overheating. If internal dissipation becomes too great, the regulator will shut down to prevent excessive heating.

Considerable effort was expended to make the LM309 easy to use and minimize the number of external components. It is not necessary to bypass the output, although this does improve transient response somewhat. Input bypassing is needed, however, if the regulator is located very far from the filter capacitor of the power supply. Stability is also achieved by methods that provide very good rejection of load or line transients as are usually seen with TTL logic.

Although designed primarily as a fixed-voltage regulator, the output of the LM309 can be set to voltages above 5V, as shown below. It is also possible to use the circuit as the control element in precision regulators, taking advantage of the good current-handling capability and the thermal overload protection.

To summarize, outstanding features of the regulator are:

- Specified to be compatible, worst case, with TTL and DTL
- Output current in excess of 1A
- Internal thermal overload protection
- No external components required

schematic diagram

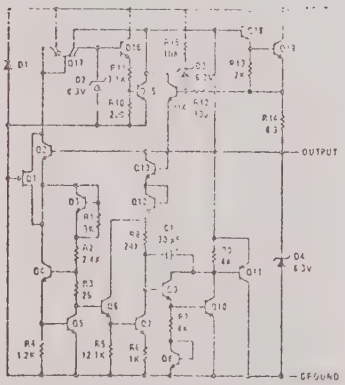

typical application

High Stability Regulator*

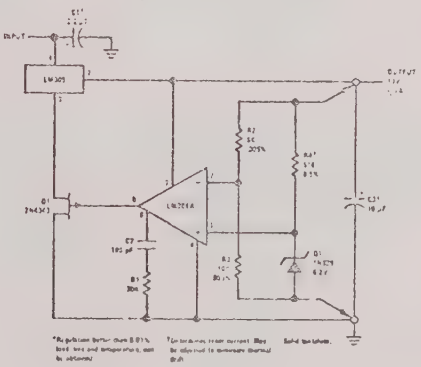

connection diagrams

TO-5 (H)

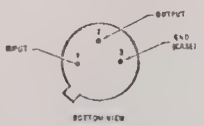

Order Number LM309H
See Package 9

TO-3 (K)

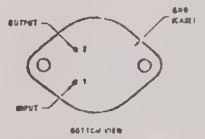

Order Number LM309K
See Package 18

LM120/LM220/LM320 series three-terminal negative regulators

general description

The LM120 Series are three-terminal negative regulators with a fixed output voltage of -5V, -5.2V, -6V, -8V, -12V, -15V, -18V and -24V and up to 1.5A load current capability. These devices need only one external component — a compensation capacitor at the output, making them easy to apply. Worst case guarantees on output voltage deviation due to any combination of line, load or temperature variation assure satisfactory system operation.

Exceptional effort has been made to make the LM120 Series immune to overload conditions. The regulators have current limiting which is independent of temperature, combined with thermal overload protection. Internal current limiting protects against momentary faults while thermal shutdown prevents junction temperatures from exceeding safe limits during prolonged overloads.

Although primarily intended for fixed output voltage applications, the LM120 Series may be programmed for higher output voltages with a simple resistive divider. The low quiescent drain current of the devices allows this technique to be used with good regulation.

The LM120 Series is available in TO 5 and TO-3 packages. The TO-5 is rated at 200 mA and 2W; the TO-3 at 1A and 20W.

The LM320T Series is packaged in the easy to use Epoxy B TO-220 rated at 15 watts dissipation.

features

- Preset output voltage error less than ±3%
- Preset current limit
- Internal thermal shutdown
- Operates with input-output voltage differential down to 1V
- Excellent ripple rejection
- 50 mV load regulation

schematic and connection diagrams

TYPICAL

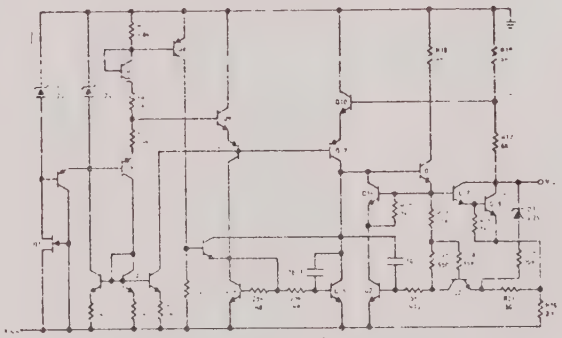

TO-5(H)

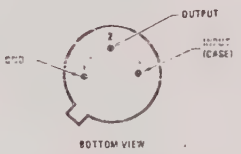

Order Numbers:
LM120H-5.0 LM120H-5.2 LM120H-6.0 LM120H-12
LM220H-5.0 LM220H-5.2 LM220H-6.0 LM220H-12
LM320H-5.0 LM320H-5.2 LM320H-6.0 LM320H-12
LM120H-15 LM120H-18 LM120H-24
LM220H-15 LM220H-18 LM220H-24
LM320H-15 LM320H-18 LM320H-24

TO-220 (T)

Order Numbers
LM320T-5.0 LM320T-12
LM320T-5.2 LM320T-15
LM320T-6.0 LM320T-18
LM320T-8.0 LM320T-24

TO-3 (K)

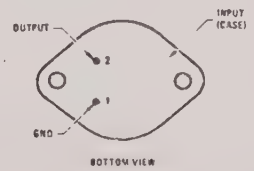

Order Numbers:
LM120K-5.0 LM120K-5.2 LM120K-6.0 LM120K-12
LM220K-5.0 LM220K-5.2 LM220K-6.0 LM220K-12
LM320K-5.0 LM320K-5.2 LM320K-6.0 LM320K-12
LM120K-15 LM120K-18 LM120K-24
LM220K-15 LM220K-18 LM220K-24
LM320K-15 LM320K-18 LM320K-24

MC3000P S-D P/N 025766

QUAD 2-INPUT "NAND" GATE

1/4 OF CIRCUIT SHOWN

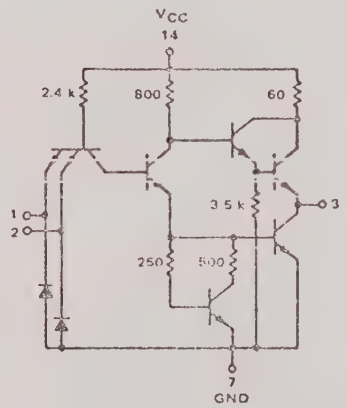

This device consists of four 2-input NAND gates. Each gate may be used as an inverter, or two gates may be cross-coupled to form bistable circuits.

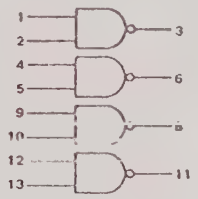

Positive Logic: $3 = \overline{1 \cdot 2}$

Negative Logic: $3 = \overline{1 + 2}$

Input Loading Factor = 1
Output Loading Factor = 10

Total Power Dissipation = 88 mW typ/pkg
Propagation Delay Time = 6.0 ns typ

MC3001P

S-D P/N 025740

QUAD 2-INPUT "AND" GATE

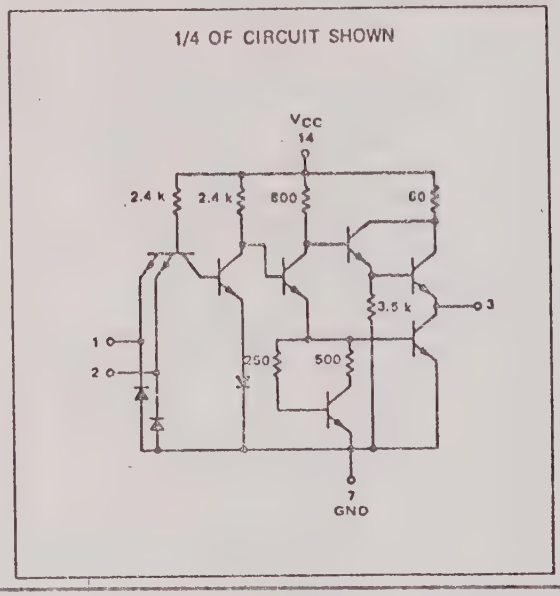

This device consists of four 2-input AND gates. This non-inverting function is useful for optimizing logic design, or for direct implementation of standard logic equations.

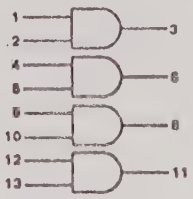

Positive Logic: $3 = 1 \cdot 2$
Negative Logic: $3 = 1 + 2$

Input Loading Factor = 1
Output Loading Factor = 10

Total Power Dissipation = 112 mW typ/pkg
Propagation Delay Time = 9.0 ns typ

MC3002P

S-D P/N 025739

QUAD 2-INPUT "NOR" GATE

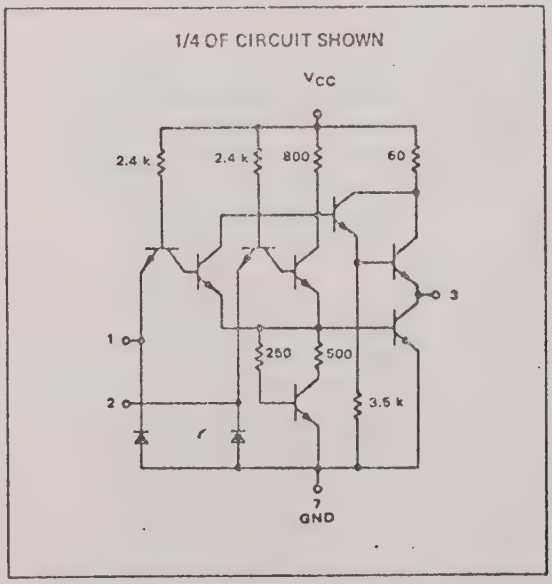

This device consists of four 2-input NOR gates. Each gate may be used as an inverter, or two gates may be cross-coupled to form bistable circuits.

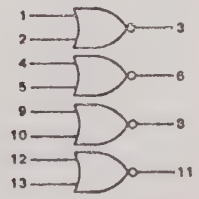

Positive Logic: $3 = \overline{1+2}$
Negative Logic: $3 = \overline{1 \cdot 2}$

Input Loading Factor = 1
Output Loading Factor = 10

Total Power Dissipation = 122 mW typ/pkg
Propagation Delay Time = 6.0 ns typ

MC3003P

S-D P/N 025767

QUAD 2-INPUT "OR" GATE

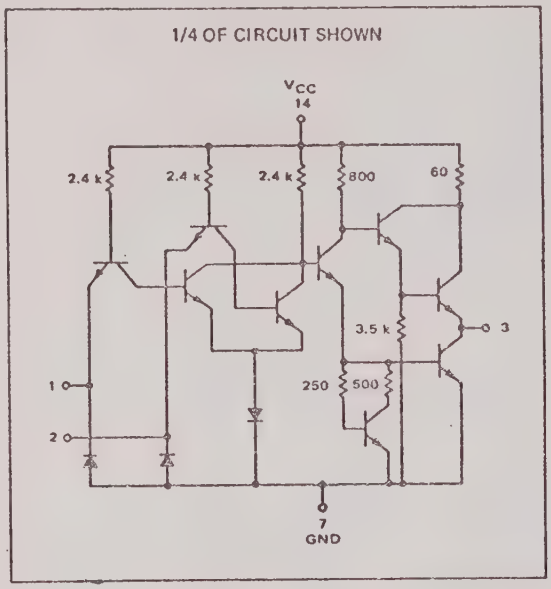

This device consists of four 2-input OR gates. This non-inverting function is useful for optimizing logic design, or for direct implementation of standard logic equations.

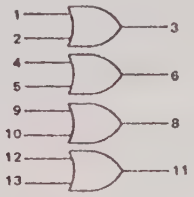

Positive Logic: 3 = 1 + 2
Negative Logic: 3 = 1 · 2

Input Loading Factor = 1
Output Loading Factor = 10

Total Power Dissipation = 150 mW typ/pkg
Propagation Delay Time = 9.0 ns typ

MC3021P

S-D P/N 025789

QUAD 2-INPUT EXCLUSIVE "OR" GATE

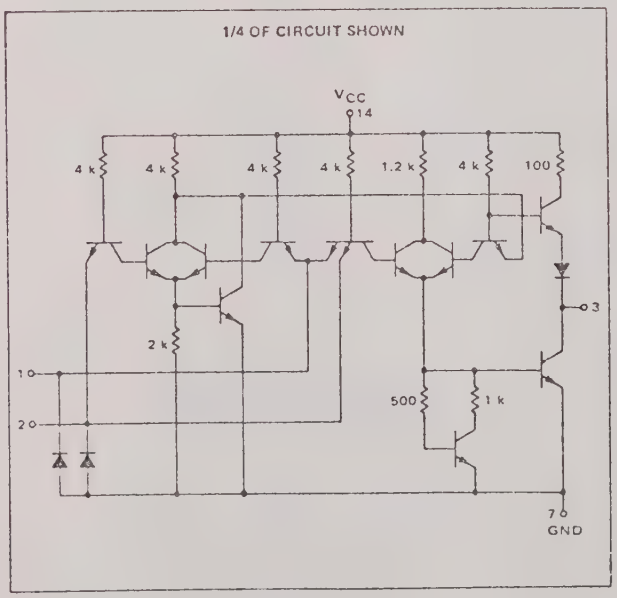

This device consists of four 2-input Exclusive OR gates. They can be used to build parity checking/generating functions. Up/down counters can be built using these gates and J-K flip-flops.

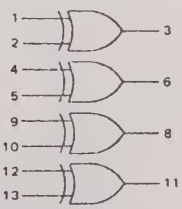

Positive Logic: $3 = 1 \cdot \bar{2} + \bar{1} \cdot 2$

Input Loading Factor = 1.6
Output Loading Factor = 8
Total Power Dissipation = 100 mW typ/pkg
Propagation Delay Time = 14 ns typ

MC4016P

S-D P/N 045237

Programmable Modulus-N Decade Counter (÷0 thru 9)

These devices are programmable, cascadable, modulo-N counters. The MC4316/4016 can be programmed to divide by any number (N) from 0 thru 9, the MC4318/4018 from 0 thru 15.

The parallel enable (PE) input enables the parallel preset inputs P0 thru P3. All zeros are entered into the counter by applying a logic "0" level to the master reset (MR) and $\overline{PE}$ inputs. This causes the counter to stop counting (count = 0). All preset inputs are independent of the logic level of the Clock.

Modulo-N counters are useful in frequency synthesizers, in phase-locked loops, and in other applications where a simple method for frequency division is needed.

——— Applies to Decade Counter only (MC4316/4016)
– – – – – – Applies to Hexadecimal Counter only (MC4318/4018)
——— Applies to Both Types.

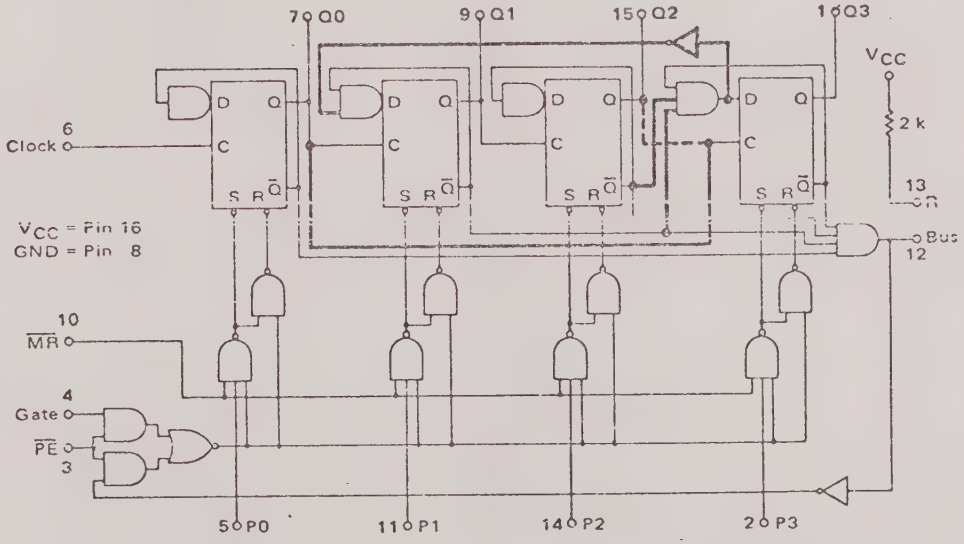

COUNT	OUTPUT			
	Q3	Q2	Q1	Q0
9	1	0	0	1
8	1	0	0	0
7	0	1	1	1
6	0	1	1	0
5	0	1	0	1
4	0	1	0	0
3	0	0	1	1
2	0	0	1	0
1	0	0	0	1
0	0	0	0	0

COUNT	OUTPUT			
	Q3	Q2	Q1	Q0
15	1	1	1	1
14	1	1	1	0
13	1	1	0	1
12	1	1	0	0
11	1	0	1	1
10	1	0	1	0
9	1	0	0	1
8	1	0	0	0
7	0	1	1	1
6	0	1	1	0
5	0	1	0	1
4	0	1	0	0
3	0	0	1	1
2	0	0	1	0
1	0	0	0	1
0	0	0	0	0

MC4024P

S-D P/N 045206

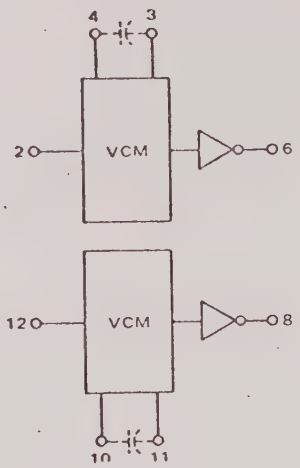

The MC4324/4024 voltage-controlled multivibrator provides appropriate level shifting to produce an output compatible with MTTL logic levels. Frequency control is accomplished through the use of voltage-variable current sources which control the slew rate of a single capacitor. Variation of the output frequency over a 3.5 to 1 range is possible with an input dc control voltage of +1.0 to +5.0 volts.

Voltage-controlled multivibrators are used in phase-locked loops for digital frequency control. They may also be used for some types of A to D converters.

V_{CC}: VCM = 1, 13
Output Buffer = 14

GND: VCM = 5, 9
Output Buffer = 7

External Capacitor for Frequency Range Determination

Output Loading Factor = 7

Power Dissipation = 150 mW typ/pkg

Maximum Operating Frequency = 30 MHz typ

CIRCUIT SCHEMATIC

1/2 OF CIRCUIT SHOWN

(Numbers in brackets are pin numbers for other half.)

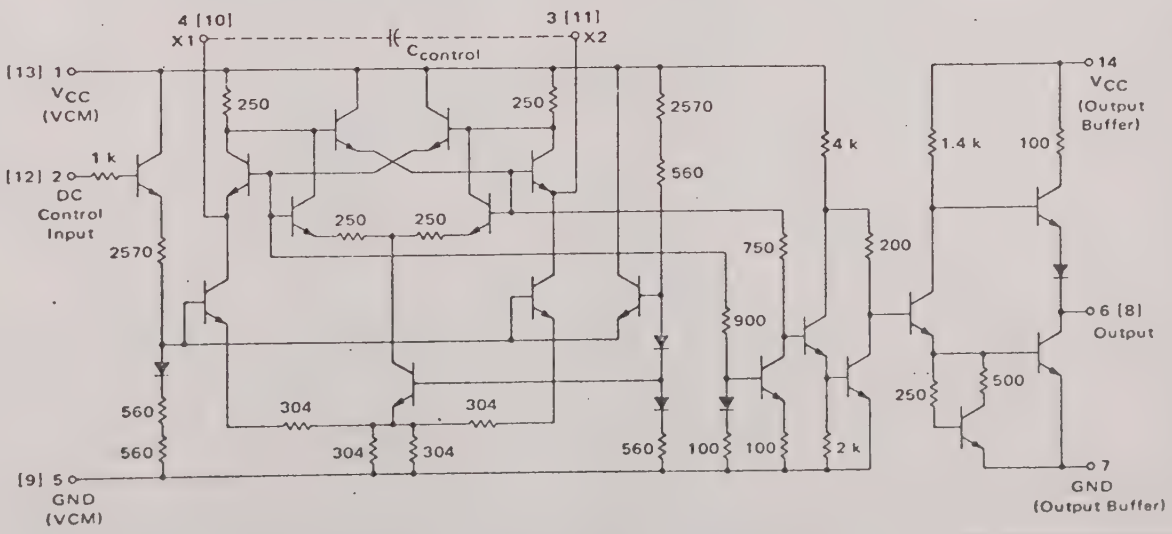

MC4044P

PHASE-FREQUENCY DETECTOR

S-D P/N 045238

The MC4344/4044 consists of two digital phase detectors, a charge pump, and an amplifier. In combination with a voltage controlled multivibrator (such as the MC4324/4024 or MC1648), it is useful in a broad range of phase-locked loop applications. The circuit accepts MTTL waveforms at the R and V inputs and generates an error voltage that is proportional to the frequency and/or phase difference of the input signals. Phase detector #1 is intended for use in systems requiring zero frequency and phase difference at lock. Phase detector #2 is used if quadrature lock is desired. Phase detector #2 can also be used to indicate that the main loop, utilizing phase detector #1, is out of lock.

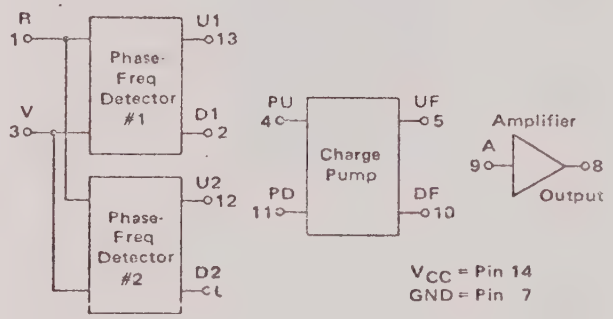

Input Loading Factor: R, V = 3

Output Loading Factor (Pin 8) = 10

Total Power Dissipation = 85 mW typ/pkg

Propagation Delay Time = 9.0 ns typ (thru phase detector)

PHASE DETECTOR

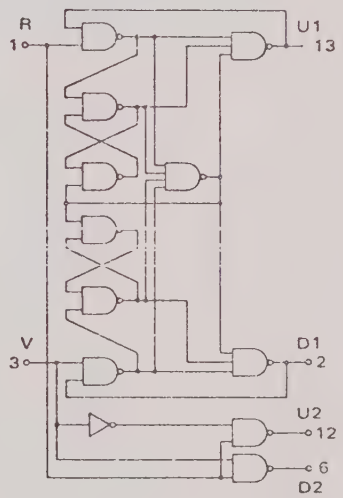

CHARGE PUMP

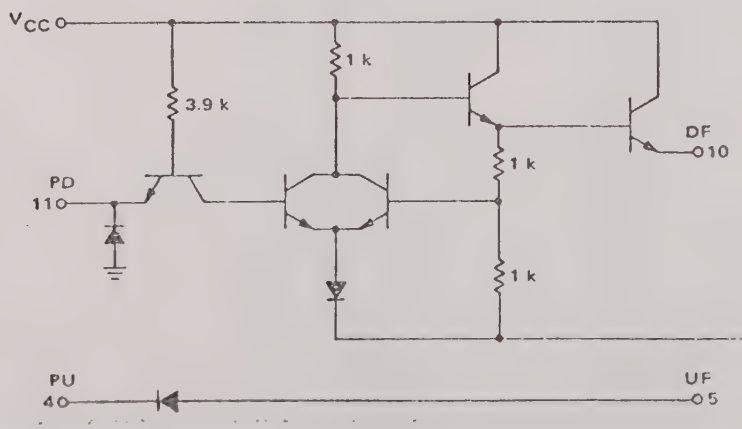

AMPLIFIER

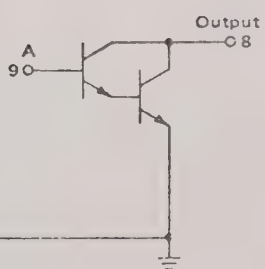

MC10131L

DUAL TYPE D MASTER-SLAVE FLIP-FLOP

S-D P/N 045239

R-S TRUTH TABLE

R	S	Q_{n+1}
L	L	Q_n
L	H	H
H	L	L
H	H	N.D.

N.D. = Not Defined

CLOCKED TRUTH TABLE

C	D	Q_{n+1}
L	ϕ	Q_n
H	L	L
H	H	H

ϕ = Don't Care

$C = \overline{C}_E + C_C$

A clock H is a clock transition from a low to a high state.

The MC10131 is a dual master-slave type D flip-flop. Asynchronous Set (S) and Reset (R) override Clock (C_C) and Clock Enable ($\overline{C}_E$) inputs. Each flip-flop may be clocked separately by holding the common clock in the low state and using the enable inputs for the clocking function. If the common clock is to be used to clock the flip-flop, the Clock Enable inputs must be in the low state. In this case, the enable inputs perform the function of controlling the common clock.

The output states of the flip-flop change on the positive transition of the clock. A change in the information present at the data (D) input will not affect the output information at any other time due to master slave construction.

Input pulldown resistors eliminate the need to tie unused inputs to V_{EE}. Output rise and fall times have been optimized to provide relaxation of system design and layout criteria.

P_D = 235 mW typ/pkg (No Load)

f_{Tog} = 160 MHz typ

POSITIVE LOGIC

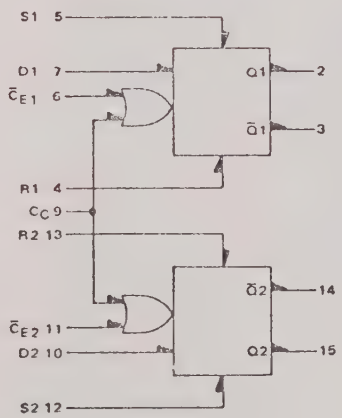

NEGATIVE LOGIC

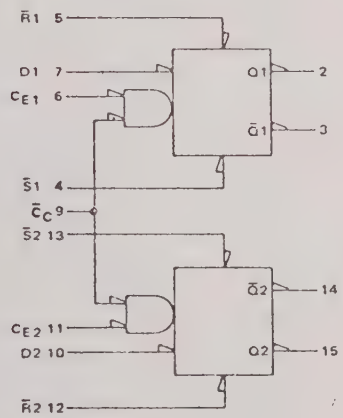

V_{CC1} = Pin 1
V_{CC2} = Pin 16
V_{EE} = Pin 8

MC12014L
COUNTER CONTROL LOGIC

S-D P/N 045264

The MC12014 monolithic counter control logic unit is designed for use with the MC12012 Two-Modulus Prescaler and the MC4016 Programmable Counter to accomplish direct high-frequency programming. The MC12014 consists of a zero detector which controls the modulus of the MC12012, and an early decode function which controls the MC4016. The early decode feature also increases the useful frequency range of the MC4016 from 8.0 MHz to 25 MHz.

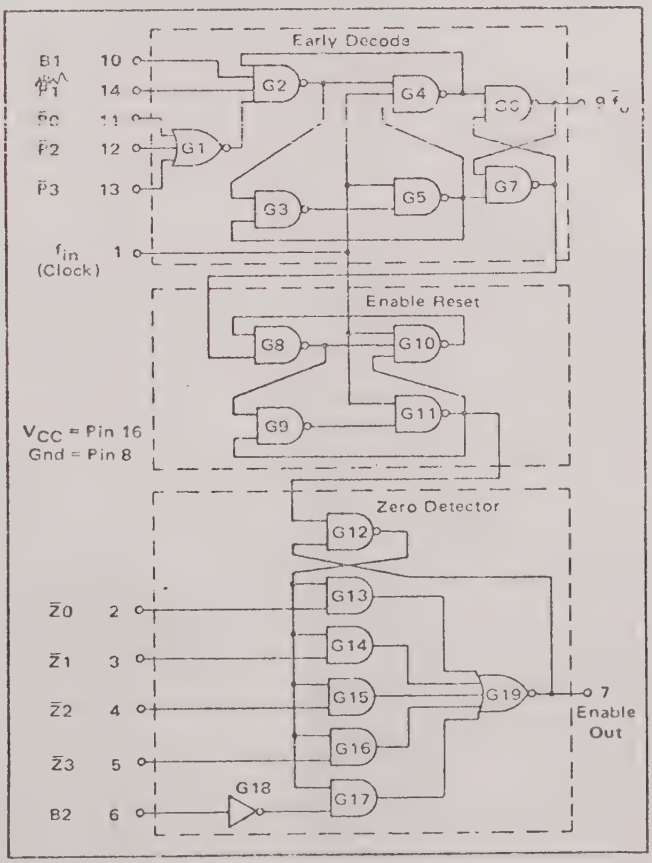

MC12040L
PHASE-FREQUENCY DETECTOR

S-D P/N 045277

The MC12040 is a phase-frequency detector intended for use in systems requiring zero phase and frequency difference at lock. In combination with a voltage controlled oscillator (such as the MC1648), it is useful in a broad range of phase-locked loop applications. Operation of this device is identical to that of Phase Detector #1 of the MC4044. A discussion of the theory of operation and applications information is given on the MC4344/4044 data sheet.

- Operating Frequency = 80 MHz typical

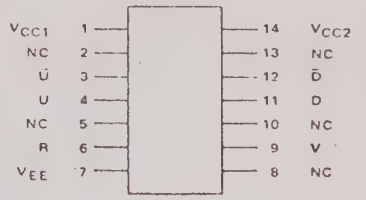

NC – No Connection

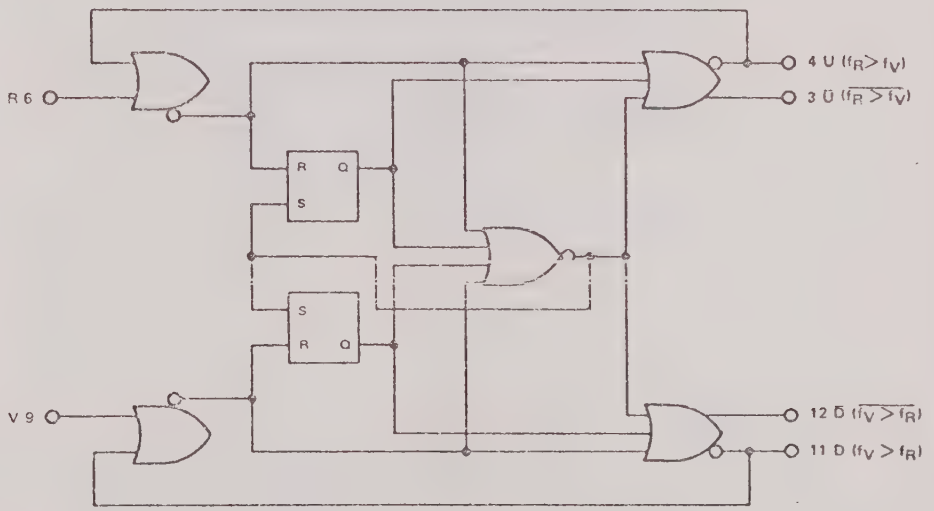

V_{CC1} = Pin 1
V_{CC2} = Pin 14
V_{CC3} = Pin 7

ELECTRICAL CHARACTERISTICS

The MC12040 has been designed to meet the dc specifications shown in the test table after thermal equilibrium has been established. Outputs are terminated through a 50 ohm resistor to +3.0 V for +5.0 V tests and through a 50 ohm resistor to -2.0 V for -5.2 V tests.

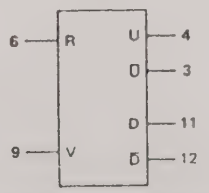

INPUT		OUTPUT			
R	V	U	D	Ū	D̄
0	0	X	X	X	X
0	1	X	X	X	X
1	1	X	X	X	X
0	1	X	X	X	X
1	1	1	0	0	1
0	1	1	0	0	1
1	1	1	0	0	1
1	0	1	0	0	1
1	1	0	0	1	1
1	0	0	0	1	1
1	1	0	1	1	0
1	0	0	1	1	0
1	1	0	1	1	0
0	1	0	1	1	0
1	1	0	0	1	0

X = Don't Care

TRUTH TABLE

This is not strictly a functional truth table; i.e., it does not cover all possible modes of operation. However it gives a sufficient number of tests to ensure that the device will function properly in all modes of operation.

MC14010CP

S-D P/N 045285

HEX BUFFERS

Noninverting – MC14010AL/CL/CP

HEX BUFFERS

The MC14009 hex inverter/buffer and MC14010 noninverting hex buffer are constructed with MOS P-channel and N-channel enhancement mode devices in a single monolithic structure. These complementary MOS devices find primary use where low power dissipation and/or high noise immunity is desired. Both devices can be used as current "sink" or "source" drivers, as CMOS-to-CMOS or CMOS-to-bipolar (TTL or DTL) logic level converters, or as multiplexers (1-to-6). The MC14009 also provides the invert function.

- Quiescent Power Dissipation = 50 nW/package typical
- High Current Sinking Capability
  8.0 mA minimum @ V_{OL} = 0.5 V and V_{DD} = 10 V
- Supply Voltage Range = 3.0 Vdc to 18 Vdc (MC14009/10 AL)
  3.0 Vdc to 16 Vdc (MC14009/10CL/CP)
- Wide CMOS-to-Bipolar Conversion Range –
  From MCMOS operating with specified supply voltage range to TTL or DTL operating with +3.0 V to +6.0 V supply. Conversion with logic output levels > 6.0 V is permitted if $V_{CC} \leq V_{DD}$.
- Pin for Pin Replacement for CD4009A – MC14009
  CD4010A – MC14010

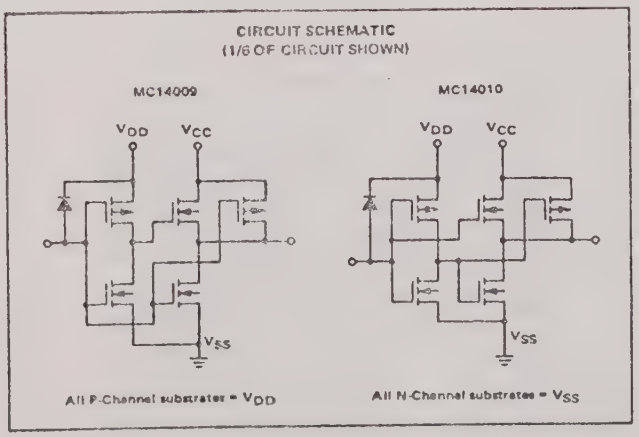

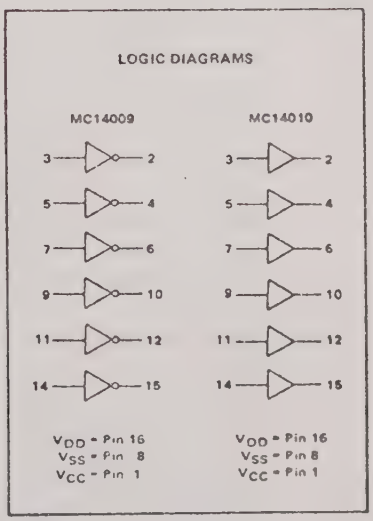

MC14013CP

S-D P/N 103199

DUAL TYPE D FLIP-FLOP

DUAL TYPE D FLIP-FLOP

The MC14013 dual type D flip-flop is constructed with MOS P-channel and N-channel enhancement mode devices in a single monolithic structure. Each flip-flop has independent Data, (D), Direct Set, (S), Direct Reset, (R), and Clock (C) inputs and complementary outputs (Q and $\bar{Q}$). These devices may be used as shift register elements or as type T flip flops for counter and toggle applications.

- Static Operation
- Quiescent Power Dissipation = 25 nW/package typical
- Noise Immunity = 45% of V_{DD} typical
- Diode Protection on All Inputs
- Supply Voltage Range = 3.0 Vdc to 18 Vdc (MC14013AL)
  = 3.0 Vdc to 16 Vdc (MC14013CL/CP)
- Single Supply Operation
- Toggle Rate = 10 MHz
- Logic Edge-Clocked Flip-Flop Design –
  Logic state is retained indefinitely with clock level either high or low; information is transferred to the output only on the positive-going edge of the clock pulse.
- Pin-for-Pin Replacement for CD4013A

TRUTH TABLE

INPUTS				OUTPUTS		
CLOCK†	DATA	RESET	SET	Q	$\bar{Q}$	
↑	0	0	0	0	1	
↑	1	0	0	1	0	
↓	X	0	0	Q	$\bar{Q}$	No Change
X	X	1	0	0	1	
X	X	0	1	1	0	
X	X	1	1	•	•	

X = Don't Care
† = Level Change
• = Invalid Condition

BLOCK DIAGRAM

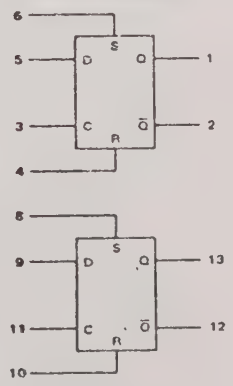

V_{DD} = Pin 14
V_{SS} = Pin 7

MC14028CP

S-D P/N 045286

BCD-TO-DECIMAL DECODER
BINARY-TO-OCTAL DECODER

BCD-TO-DECIMAL DECODER BINARY-TO-OCTAL DECODER

The MC14028 decoder is constructed so that an 8421 BCD code on the four inputs provides a decimal (one-of-ten) decoded output, while a 3-bit binary input provides a decoded octal (one-of-eight) code output with D forced to a logic "0". Expanded decoding such as binary-to-hexadecimal (one-of-16), etc., can be achieved by using other MC14028 devices. The part is useful for code conversion, address decoding, memory selection control, demultiplexing, or readout decoding.

- Diode Protection on All Inputs
- Noise Immunity = 45% of V_{DD} typical
- High Fanout — > 50
- Buffered Outputs Compatible with HTL and Low-Power TTL
- Positive Logic Design
- Low Power Dissipation of 25 nW/package typical
- Low Outputs on All Illegal Input Combinations
- Pin-for-Pin Replacement for CD4028A

This device contains circuitry to protect the inputs against damage due to high static voltages or electric fields; however, it is advised that normal precautions be taken to avoid application of any voltage higher than maximum rated voltages to this high impedance circuit. For proper operation it is recommended that V_{in} and V_{out} be constrained to the range $V_{SS} \leq (V_{in}$ or $V_{out}) \leq V_{DD}$.
Unused inputs must always be tied to an appropriate logic voltage level (e.g., either V_{SS} or V_{DD}).

BLOCK DIAGRAM

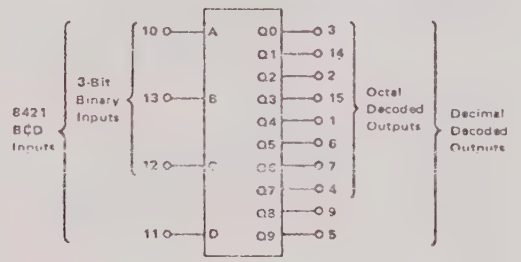

V_{DD} = Pin 16
V_{SS} = Pin 8

TRUTH TABLE

INPUT				OUTPUT									
D	C	B	A	Q9	Q8	Q7	Q6	Q5	Q4	Q3	Q2	Q1	Q0
0	0	0	0	0	0	0	0	0	0	0	0	0	1
0	0	0	1	0	0	0	0	0	0	0	0	1	0
0	0	1	0	0	0	0	0	0	0	0	1	0	0
0	0	1	1	0	0	0	0	0	0	1	0	0	0
0	1	0	0	0	0	0	0	0	1	0	0	0	0
0	1	0	1	0	0	0	0	1	0	0	0	0	0
0	1	1	0	0	0	0	1	0	0	0	0	0	0
0	1	1	1	0	0	1	0	0	0	0	0	0	0
1	0	0	0	0	1	0	0	0	0	0	0	0	0
1	0	0	1	1	0	0	0	0	0	0	0	0	0
1	0	1	0	0	0	0	0	0	0	0	0	0	0
1	0	1	1	0	0	0	0	0	0	0	0	0	0
1	1	0	0	0	0	0	0	0	0	0	0	0	0
1	1	0	1	0	0	0	0	0	0	0	0	0	0
1	1	1	0	0	0	0	0	0	0	0	0	0	0
1	1	1	1	0	0	0	0	0	0	0	0	0	0

LOGIC DIAGRAM

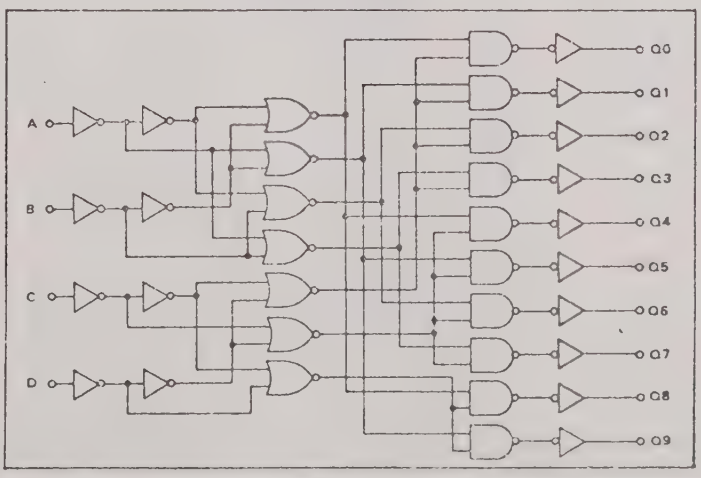

MC14510CP

BCD UP/DOWN COUNTER

S-D P/N 045287

BCD UP/DOWN COUNTER

The MC14510 BCD up/down counter is constructed with MOS P-channel and N-channel enhancement mode devices in a single monolithic structure. The counter consists of type D flip-flop stages with a gating structure to provide type T flip-flop capability. The counter can be cleared by applying a high level on the Reset line. This complementary MOS counter finds primary use in up/down and difference counting and frequency synthesizer applications where low power dissipation and/or high noise immunity is desired. It is also useful in A/D and D/A conversion and for magnitude and sign generation.

- Quiescent Power Dissipation = 0.25 μW/package typical @ 5.0 Vdc
- Noise Immunity = 45% of V_{DD} typical
- Diode Protection on All Inputs
- Supply Voltage Range = 3.0 Vdc to 18 Vdc (MC14510AL)
  = 3.0 Vdc to 16 Vdc (MC14510CL/CP)
- Low Input Capacitance — 5.0 pF typical
- Internally Synchronous for High Speed
- Logic Edge-Clocked Design — Count Occurs on Positive Going Edge of Clock
- 6.0-MHz Counting Rate

This device contains circuitry to protect the inputs against damage due to high static voltages or electric fields; however, it is advised that normal precautions be taken to avoid application of any voltage higher than maximum rated voltages to this high impedance circuit. For proper operation it is recommended that V_{in} and V_{out} be constrained to the range $V_{SS} \leq (V_{in}$ or $V_{out}) \leq V_{DD}$.

Unused inputs must always be tied to an appropriate logic voltage level (e.g., either V_{SS} or V_{DD}).

TRUTH TABLE

$\overline{\text{CARRY IN}}$	UP/DOWN	PRESET ENABLE	RESET	ACTION
1	X	0	0	No Count
0	1	0	0	Count Up
0	0	0	0	Count Down
X	X	1	0	Preset
X	X	X	1	Reset

X = Don't Care

BLOCK DIAGRAM

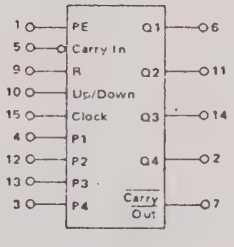

V_{DD} = Pin 16
V_{SS} = Pin 8

MC14519CP
4-BIT AND/OR SELECTOR

S-D P/N 045288

4-BIT AND/OR SELECTOR
or
QUAD 2-CHANNEL DATA SELECTOR
or
QUAD EXCLUSIVE "NOR" GATE

The MC14519 is constructed with MOS P-channel and N-channel enhancement mode devices in a single monolithic structure. These complementary MOS logic gates find primary use where low power dissipation and/or high noise immunity is desired.

This device exemplifies the design versatility of MCMOS logic structure. This part provides three functions in one package; a 4-Bit AND/OR Selector, a Quad 2-Channel Data Selector, or a Quad Exclusive NOR Gate.

- Quiescent Power Dissipation = 100 nW/package typical
- Noise Immunity = 45% of V_{DD} typical
- Diode Protection on All Inputs
- Supply Voltage Range = 3.0 Vdc to 18 Vdc (MC14519AL)
  3.0 Vdc to 16 Vdc (MC14519CL/CP)
- Single Supply Operation — Positive or Negative
- High Fanout > 50
- Input Impedance = 10^{12} ohms typical
- Logic Swing Independent of Fanout
- Plug-In Replacement for CD4019 in Most Applications

This device contains circuitry to protect the inputs against damage due to high static voltages or electric fields; however, it is advised that normal precautions be taken to avoid application of any voltage higher than maximum rated voltages to this high impedance circuit. For proper operation it is recommended that V_{in} and V_{out} be constrained to the range $V_{SS} \leq (V_{in}$ or $V_{out}) \leq V_{DD}$.
Unused inputs must always be tied to an appropriate logic voltage level (e.g., either V_{SS} or V_{DD}).

LOGIC DIAGRAM
(Positive Logic)

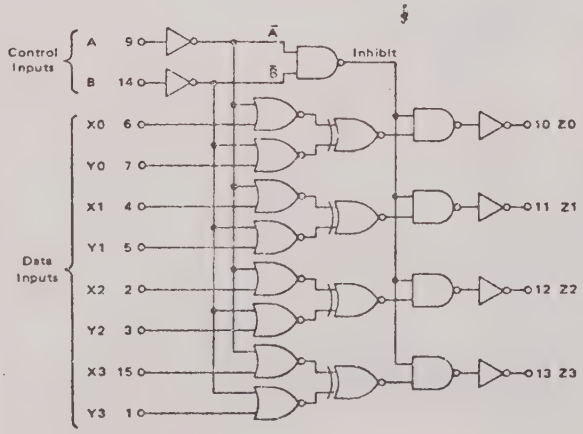

V_{DD} = Pin 16
V_{SS} = Pin 8

TRUTH TABLE

CONTROL INPUTS		OUTPUT
A	B	Z_n
0	0	0
0	1	Y_n
1	0	X_n
1	1	$X_n \circledcirc Y_n$

Note:
$X_n \circledcirc Y_n$ means X_n (Exclusive-NOR) Y_n

INTEGRAL DIODE ASSEMBLIES

. . . diffused silicon dice interconnected and transfer molded into rectifier circuit assemblies for use in applications where high output current/size ratio is of prime importance. These devices feature:

- Void-free, Transfer-molded Encapsulation to Assure High Resistance to Shock, Vibration, and Temperature Extremes
- High Dielectric Strength
- Simple, Compact Structure for Trouble-free Performance
- High Surge Capability – 100 Amps

SINGLE-PHASE
FULL-WAVE BRIDGE

4 AMPERES
50 – 200 VOLTS

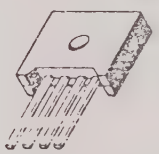

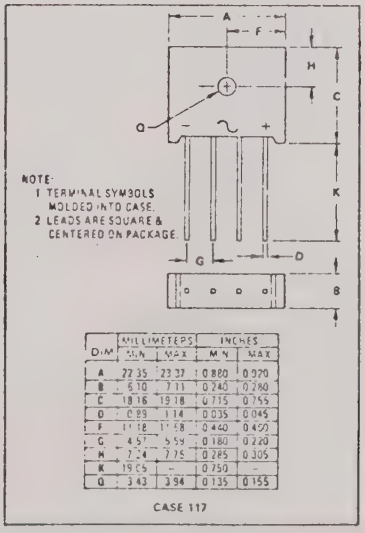

DIM	MILLIMETERS MIN	MAX	INCHES MIN	MAX
A	22.35	23.37	0.880	0.920
B	6.10	7.11	0.240	0.280
C	18.16	19.18	0.715	0.755
D	0.89	1.14	0.035	0.045
F	11.18	12.68	0.440	0.490
G	4.57	5.59	0.180	0.220
H	7.24	7.75	0.285	0.305
K	19.05	–	0.750	–
Q	3.43	3.94	0.135	0.155

CASE 117

MFE121

N–CHANNEL

DUAL GATE
MOS FIELD–EFFECT
TRANSISTORS
Type B

S-D P/N 101413

N-CHANNEL DUAL-GATE SILICON-NITRIDE PASSIVATED MOS FIELD-EFFECT TRANSISTORS

. . . depletion mode (Type B) dual gate transistors designed for VHF amplifier and mixer applications. These types are specified as follows:

- MFE120 – RF Amplifier @ 105 MHz
  MFE 121 – RF Amplifier @ 60 and 200 MHz
  MFE 122 – Mixer @ 60 and 200 MHz
- Silicon Nitride Passivation for Excellent Long Term Stability
- Diode Protected Gates

MAXIMUM RATINGS

Rating	Symbol	Value	Unit
Drain-Source Voltage	V_{DS}	+25	Vdc
Drain Current	I_D	30	mAdc
Total Device Dissipation @ T_A = 25°C (Package Limitation)	P_D	300	mW
Derate above 25°C		1.7	mW/°C
Operating and Storage Junction Temperature Range	T_J, T_{stg}	-65 to +200	°C

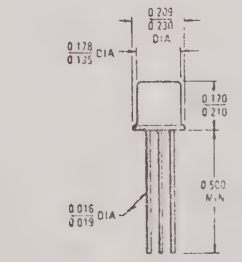

To convert inches to millimeters multiply by 25.4

All JEDEC dimensions and notes apply

CASE 20 (9)
TO 72

MV2103

S-D P/N 100433

VVC

SILICON EPICAP DIODES

. . . designed in the popular PLASTIC PACKAGE for high volume requirements of FM Radio and TV tuning and AFC, general frequency control and tuning applications; providing solid-state reliability in replacement of mechanical tuning methods.

- High Q with Guaranteed Minimum Values
- Controlled and Uniform Tuning Ratio
- Standard Capacitance Tolerance – 10%
- Complete Typical Design Curves

VOLTAGE-VARIABLE CAPACITANCE DIODES

6.8-100 pF
30 VOLTS

MAXIMUM RATINGS

Rating	Symbol	Value	Unit
Reverse Voltage	V_R	30	Volts
Forward Current	I_F	200	mA
Device Dissipation @ T_A = 25°C Derate above 25°C	P_D	280 2.8	mW mW/°C
Junction Temperature	T_J	+125	°C
Storage Temperature Range	T_{stg}	-65 to +150	°C

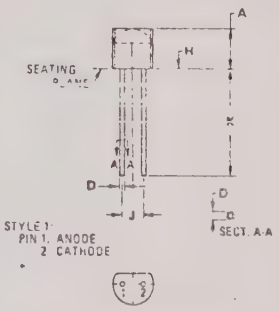

DIM	MILLIMETERS MIN	MILLIMETERS MAX	INCHES MIN	INCHES MAX
A	4.45	4.70	0.175	0.185
D	0.41	0.46	0.016	0.019
J	2.29	2.79	0.090	0.110
K	12.70	–	0.500	–

CASE 182-03

Device	C_T, Diode Capacitance V_R = 4.0 Vdc, f = 1.0 MHz, pF Min	Nom	Max	Q, Figure of Merit V_R = 4.0 Vdc, f = 50 MHz Min	TR, Tuning Ratio C_2/C_{30} f = 1.0 MHz Min	Typ	Max
MV2101	6.1	6.8	7.5	450	2.5	2.7	3.2
MV2102	7.4	8.2	9.0	450	2.5	2.8	3.2
MV2103	9.0	10.0	11.0	400	2.5	2.9	3.2
MV2104	10.8	12.0	13.2	400	2.5	2.9	3.2
MV2105	13.5	15.0	16.5	400	2.5	2.9	3.2
MV2106	16.2	18.0	19.8	350	2.5	2.9	3.2
MV2107	19.8	22.0	24.2	350	2.5	2.9	3.2
MV2108	24.3	27.0	29.7	300	2.5	3.0	3.2
MV2109	29.7	33.0	36.3	200	2.5	3.0	3.2
MV2110	35.1	39.0	42.9	150	2.5	3.0	3.2
MV2111	42.3	47.0	51.7	150	2.5	3.0	3.2
MV2112	50.4	56.0	61.6	150	2.6	3.0	3.3
MV2113	61.2	68.0	74.8	150	2.6	3.0	3.3
MV2114	73.8	82.0	90.2	100	2.6	3.0	3.3
MV2115	90.0	100.0	110.0	100	2.6	3.0	3.3

NE555V S-D P/N 045208

DESCRIPTION

The NE/SE 555 monolithic timing circuit is a highly stable controller capable of producing accurate time delays, or oscillation. Additional terminals are provided for triggering or resetting if desired. In the time delay mode of operation, the time is precisely controlled by one external resistor and capacitor. For a stable operation as an oscillator, the free running frequency and the duty cycle are both accurately controlled with two external resistors and one capacitor. The circuit may be triggered and reset on falling waveforms, and the output structure can source or sink up to 200mA or drive TTL circuits.

FEATURES

- TIMING FROM MICROSECONDS THROUGH HOURS
- OPERATES IN BOTH ASTABLE AND MONOSTABLE MODES
- ADJUSTABLE DUTY CYCLE
- HIGH CURRENT OUTPUT CAN SOURCE OR SINK 200mA
- OUTPUT CAN DRIVE TTL
- TEMPERATURE STABILITY OF 0.005% PER °C
- NORMALLY ON AND NORMALLY OFF OUTPUT

APPLICATIONS

PRECISION TIMING
PULSE GENERATION
SEQUENTIAL TIMING
TIME DELAY GENERATION
PULSE WIDTH MODULATION
PULSE POSITION MODULATION
MISSING PULSE DETECTOR

PIN CONFIGURATIONS

T PACKAGE
(Top View)

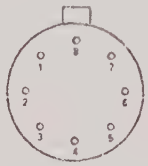

1. Ground
2. Trigger
3. Output
4. Reset
5. Control Voltage
6. Threshold
7. Discharge
8. V_{CC}

ORDER PART NOS. SE555T/NE555T

V PACKAGE
(Top View)

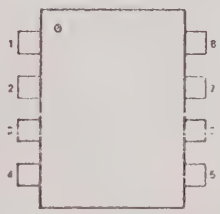

1. Ground
2. Trigger
3. Output
4. Reset
5. Control Voltage
6. Threshold
7. Discharge
8. V_{CC}

ORDER PART NOS. SE555V/NE555V

ABSOLUTE MAXIMUM RATINGS

Supply Voltage	+18V
Power Dissipation	600 mW
Operating Temperature Range	
NE555	0°C to +70°C
SE555	−55°C to +125°C
Storage Temperature Range	−65°C to +150°C
Lead Temperature (Soldering, 60 seconds)	+300°C

NE555V S-D P/N 045208

BLOCK DIAGRAM

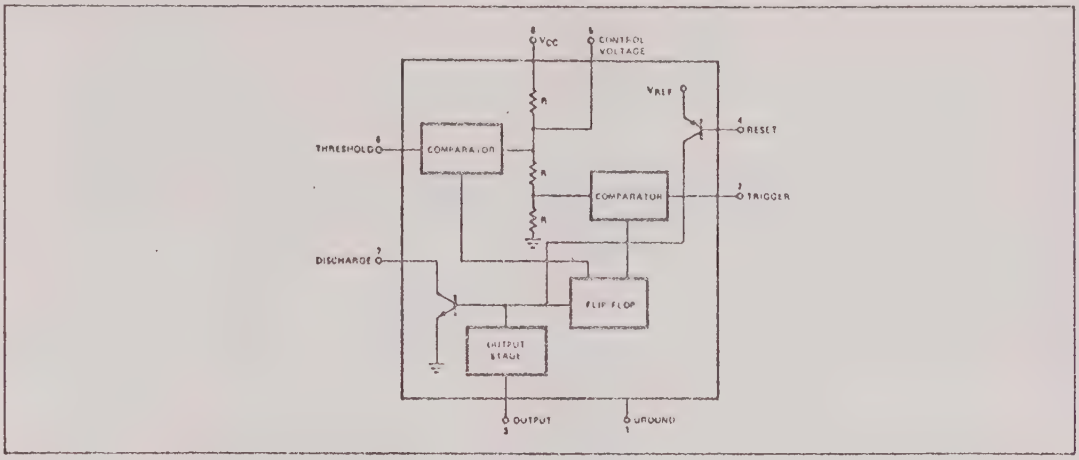

EQUIVALENT CIRCUIT

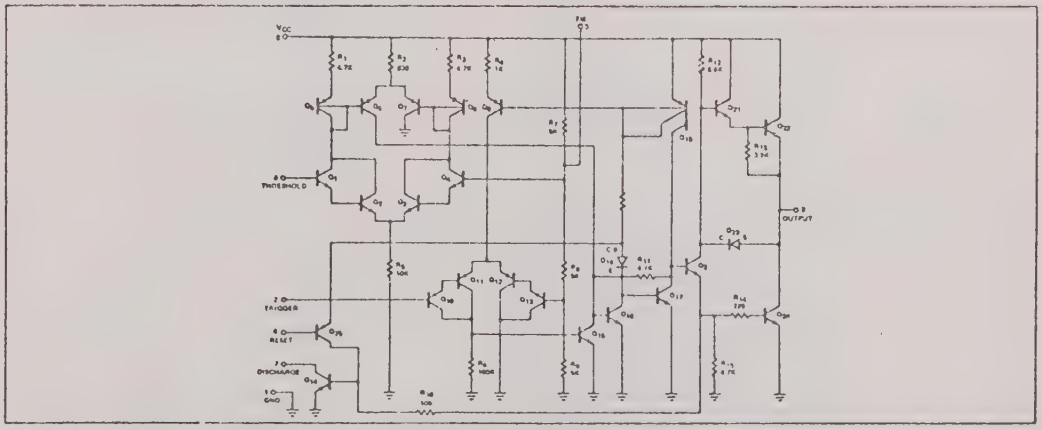

SMV1157 S-D P/N 100462

VARACTOR DIODE, MICROWAVE

SYMBOL METHOD MIL-STD-780	VR (VOLTS)	IR (mA)	f (HZ)	SUB GROUP	MIN	MAX	UNITS
IR	10			2	---	0.1	μA
BVR		10 μA			12	---	V
Q	1.0		1M		130	---	---
CT	1.0		1M		495	605	pF
C1/C8			1M		15	---	---

CASE 182-02 TO-92

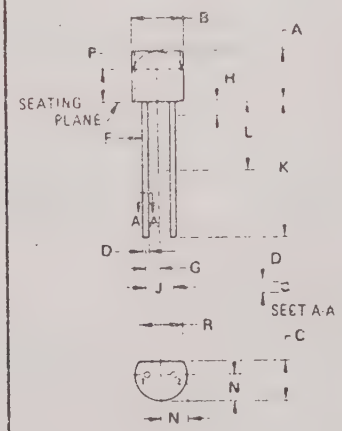

STYLE 1:
PIN 1. ANODE
2. CATHODE

STYLE 2:
PIN 1. CATHODE
2. ANODE

STYLE 3:
PIN 1. MAIN TERMINAL 1
2. MAIN TERMINAL 2

DIM	MILLIMETERS MIN	MILLIMETERS MAX	INCHES MIN	INCHES MAX
A	4.32	5.33	0.170	0.210
B	4.45	5.21	0.175	0.205
C	3.18	4.19	0.125	0.165
D	0.356	0.533	0.014	0.021
F	0.407	0.482	0.016	0.019
G	1.27 BSC		0.050 BSC	
H	–	1.27		0.050
J	2.54 BSC		0.100 BSC	
K	12.70	–	0.5[illegible]	–
L	6.35	–	0.250	–
N	2.03	2.66	0.080	0.105
P	2.93	–	0.115	–
R	3.43	–	0.135	–

All JEDEC dimensions and notes apply

SN15846N

S-D P/N 019716

schematic (each gate)

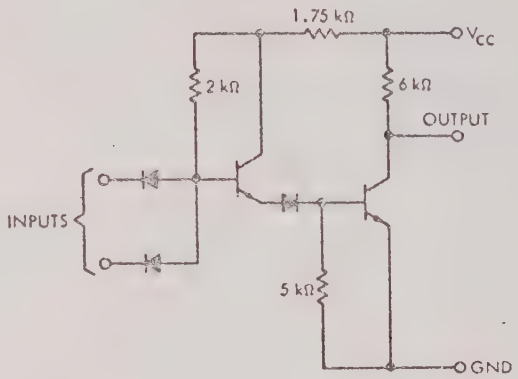

Component values shown are nominal.

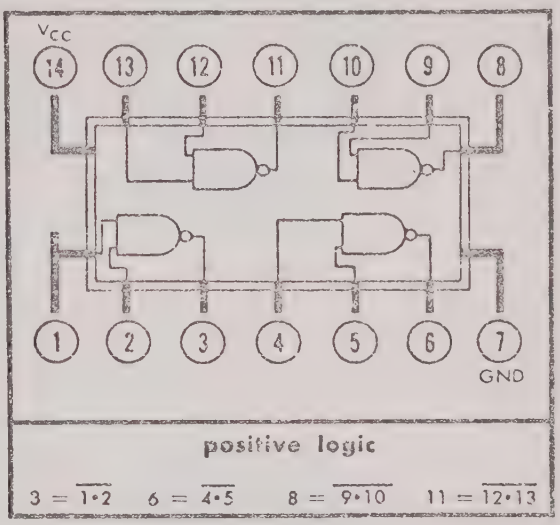

positive logic

$3 = \overline{1 \cdot 2}$ $6 = \overline{4 \cdot 5}$ $8 = \overline{9 \cdot 10}$ $11 = \overline{12 \cdot 13}$

recommended operating conditions

Supply Voltage V_{CC} . . . . . 5 V

Maximum Fan-Out From Each Output 8

electrical characteristics at $V_{CC} = 5$ V

PARAMETER		TEST FIGURE	TEST CONDITIONS	MIN	MAX	UNIT
$V_{out(0)}$	Logical 0 output voltage (on level)	1	$V_{in} = 1.9$ V, $I_{sink} = 12$ mA, $T_A = 25°C$		0.45	V
			$V_{in} = 2$ V, $I_{sink} = 12$ mA, $T_A = 0°C$		0.45	V
			$V_{in} = 1.8$ V, $I_{sink} = 11.4$ mA, $T_A = 75°C$		0.5	V
$V_{out(1)}$	Logical 1 output voltage (off level)	2	$V_{in} = 1.1$ V, $I_{load} = -0.12$ mA, $T_A = 25°C$	2.6		V
			$V_{in} = 1.2$ V, $I_{load} = -0.12$ mA, $T_A = 0°C$	2.6		V
			$V_{in} = 0.95$ V, $I_{load} = -0.12$ mA, $T_A = 75°C$	2.5		V

TABLE 5.5 COMPONENT DESCRIPTIONS (Cont'd)

SN7400N
SN74LS00N

S-D P/N 019705
S-D P/N 103130

QUADRUPLE 2-INPUT
POSITIVE-NAND GATES

positive logic:
$Y = \overline{AB}$

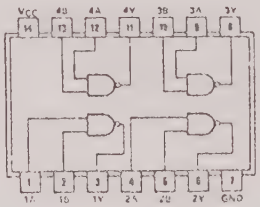

SN5400/SN7400(J, N)
SN54H00/SN74H00(J, N)
SN54L00/SN74L00(J, N)
SN54LS00/SN74LS00(J, N, W)
SN54S00/SN74S00(J, N, W)

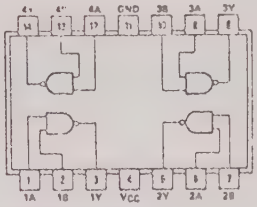

SN5400/SN7400(W)
SN54H00/SN74H00(W)
SN54L00/SN74L00(T)

SN74L03N

S-D P/N 019709

03
QUADRUPLE 2-INPUT
POSITIVE-NAND GATES
WITH OPEN-COLLECTOR OUTPUTS

positive logic:
$Y = \overline{AB}$

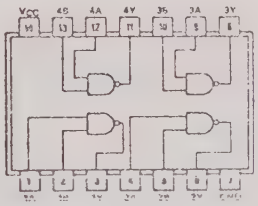

SN5403/SN7403(J, N)
SN54L03/SN74L03(J, N)
SN54LS03/SN74LS03(J, N, W)
SN54S03/SN74S03(J, N, W)

SN7404N
SN74LS04N

S-D P/N 025779
S-D P/N 103749

HEX INVERTERS

positive logic:
$Y = \overline{A}$

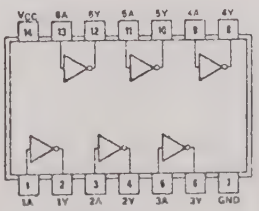

SN5404/SN7404(J, N)
SN54H04/SN74H04(J, N)
SN54L04/SN74L04(J, N)
SN54LS04/SN74LS04(J, N, W)
SN54S04/SN74S04(J, N, W)

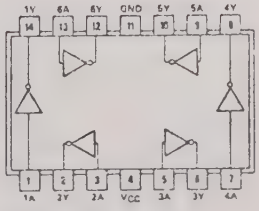

SN5404/SN7404(W)
SN54H04/SN74H04(W)
SN54L04/SN74L04(T)

SN7408N
SN74LS08N

S-D P/N 103093
S-D P/N 103967

08
QUADRUPLE 2-INPUT
POSITIVE-AND GATES

positive logic:
$Y = AB$

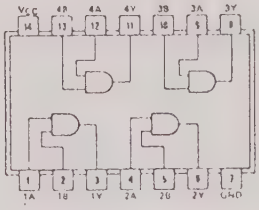

SN5408/SN7408(J, N, W)
SN54LS08/SN74LS08(J, N, W)

SN7409N

S-D P/N 103321

09
QUADRUPLE 2-INPUT
POSITIVE-AND GATES
WITH OPEN-COLLECTOR OUTPUTS

positive logic:
$Y = AB$

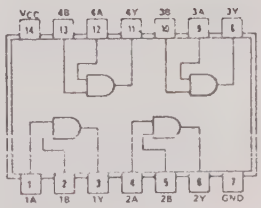

SN5409/SN7409(J, N, W)
SN54LS09/SN74LS09(J, N, W)

SN74LS10N

S-D P/N 103968

10
TRIPLE 3-INPUT
POSITIVE-NAND GATES

positive logic:
$Y = \overline{ABC}$

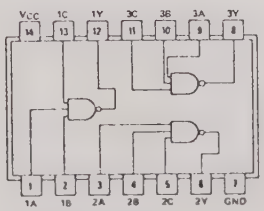

SN5410/SN7410(J, N)
SN54H10/SN74H10(J, N)
SN54L10/SN74L10(J, N)
SN54LS10/SN74LS10(J, N, W)
SN54S10/SN74S10(J, N, W)

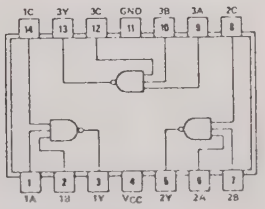

SN5410/SN7410(W)
SN54H10/SN74H10(W)
SN54L10/SN74L10(T)

TABLE 5.5 COMPONENT DESCRIPTIONS (Cont'd)

SN7414N — S-D P/N 117078

14
HEX SCHMITT-TRIGGER INVERTERS

positive logic:
$Y = \overline{A}$

See page 98

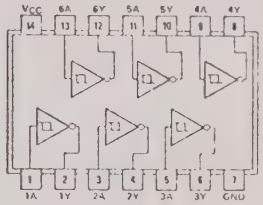

SN5414/SN7414(J, N, W)

SN7417N — S-D P/N 106629

17
HEX BUFFERS/DRIVERS WITH OPEN-COLLECTOR HIGH-VOLTAGE OUTPUTS

positive logic:
$Y = A$

See page 106

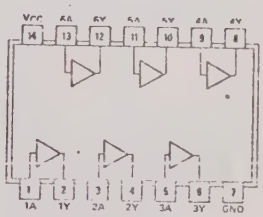

SN5417/SN7417(J, N, W)

SN7420N — 025713
SN74LS20N — 103969

20
DUAL 4-INPUT POSITIVE-NAND GATES

positive logic:
$Y = \overline{ABCD}$

See page 86

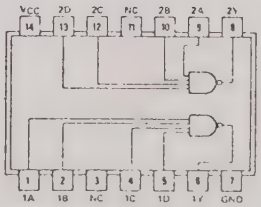

SN5420/SN7420(J, N)
SN54H20/SN74H20(J, N)
SN54L20/SN74L20(J, N)
SN54LS20/SN74LS20(J, N, W)
SN54S20/SN74S20(J, N, W)

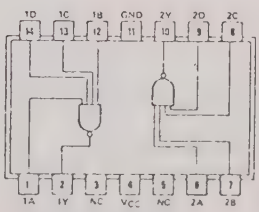

SN5420/SN7420(W)
SN54H20/SN74H20(W)
SN54L20/SN74L20(T)

NC—No internal connection

SN7425N

S-D P/N 045296

25

DUAL 4-INPUT
POSITIVE-NOR GATES
WITH STROBE

positive logic:
$Y = \overline{G(A+B+C+D)}$

See page 92

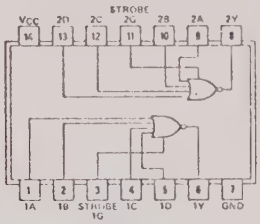

SN5425/SN7425 (J, N, W)

SN74LS30N

S-D P/N 103971

30

8 INPUT
POSITIVE-NAND GATES

positive logic:
$Y = \overline{ABCDEFGH}$

See page 86

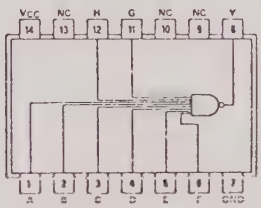

SN5430/SN7430(J, N)
SN54H30/SN74H30(J, N)
SN54L30/SN74L30(J, N)
SN54LS30/SN74LS30(J, N, W)
SN54S30/SN74S30(J, N, W)

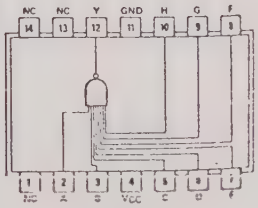

SN5430/SN7430(W)
SN54H30/SN74H30(W)
SN54L30/SN74L30(T)

NC—No internal connection

SN7432N
SN74LS32N

045217
103972

QUADRUPLE 2-INPUT
POSITIVE-OR GATES

positive logic:
$Y = A+B$

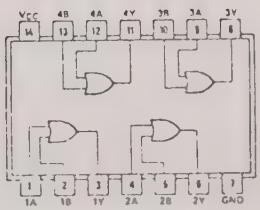

SN5432/SN7432(J, N, W)
SN54LS32/SN74LS32(J, N, W)

SN7442N
SN74LS42N

S-D P/N 025749
S-D P/N 103131

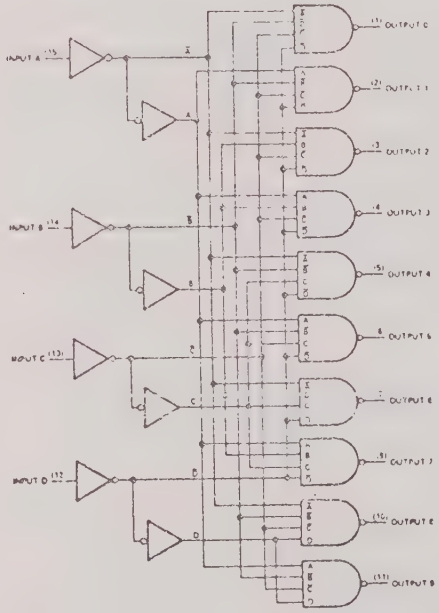

'42A, 'L42, 'LS42
BCD-TO-DECIMAL DECODERS

'42A THRU '44A
'L42 THRU 'L44
EQUIVALENT OF
EACH INPUT

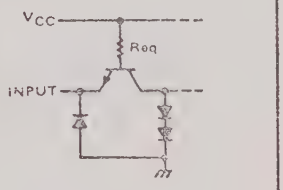

'42A THRU '44A: R_{eq} = 4 kΩ NOM
'L42 THRU 'L44: R_{eq} = 8 kΩ NOM

'42A THRU '44A
'L42 THRU 'L44
TYPICAL OF
ALL OUTPUTS

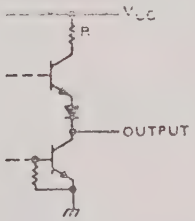

'42A THRU '44A: R = 130 Ω NOM
'L42 THRU 'L44: R = 260 Ω NOM

SN7442N
SN74LS42N

S-D P/N 025749
S-D P/N 103131

'42A, 'L42, 'LS42 . . . BCD-TO-DECIMAL

TYPES	TYPICAL POWER DISSIPATION	TYPICAL PROPAGATION DELAYS
'42A, '43A, '44A	140 mW	17 ns
'L42, 'L43, 'L44	70 mW	49 ns
'LS42	35 mW	17 ns

SN5442A THRU SN5444A, SN54LS42 . . . J OR W PACKAGE
SN54L42 THRU SN54L44 . . . J PACKAGE
SN7442A THRU SN7444A,
SN74L42 THRU SN74L44, SN74LS42 . . . J OR N PACKAGE
(TOP VIEW)

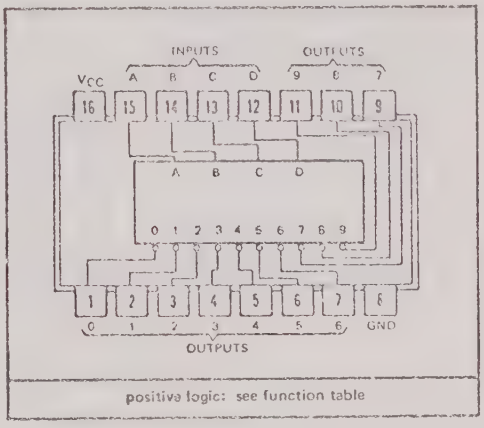

positive logic: see function table

description

These monolithic decimal decoders consist of eight inverters and ten four-input NAND gates. The inverters are connected in pairs to make BCD input data available for decoding by the NAND gates. Full decoding of valid input logic ensures that all outputs remain off for all invalid input conditions.

The '42A, 'L42, and 'LS42 BCD-to-decimal decoders, the '43A and 'L43 excess-3-to-decimal decoders, and the '44A and 'L44 excess-3-gray to-decimal decoders feature inputs and outputs that are compatible for use with most TTL and other saturated low-level logic circuits. D-c noise margins are typically one volt.

Series 54, 54L, and 54LS circuits are characterized for operation over the full military temperature range of −55°C to 125°C; Series 74, 74L, and 74LS circuits are characterized for operation from 0°C to 70°C.

FUNCTION TABLE

NO.	'42A, 'L42, 'LS42 BCD INPUT				'43A, 'L43 EXCESS-3-INPUT				'44A, 'L44 EXCESS-3-GRAY INPUT				ALL TYPES DECIMAL OUTPUT									
	D	C	B	A	D	C	B	A	D	C	B	A	0	1	2	3	4	5	6	7	8	9
0	L	L	L	L	L	L	H	H	L	L	H	L	L	H	H	H	H	H	H	H	H	H
1	L	L	L	H	L	H	L	L	L	H	H	L	H	L	H	H	H	H	H	H	H	H
2	L	L	H	L	L	H	L	H	L	H	H	H	H	H	L	H	H	H	H	H	H	H
3	L	L	H	H	L	H	H	L	L	H	L	H	H	H	H	L	H	H	H	H	H	H
4	L	H	L	L	L	H	H	H	L	H	L	L	H	H	H	H	L	H	H	H	H	H
5	L	H	L	H	H	L	L	L	H	H	L	L	H	H	H	H	H	L	H	H	H	H
6	L	H	H	L	H	L	L	H	H	H	L	H	H	H	H	H	H	H	L	H	H	H
7	L	H	H	H	H	L	H	L	H	H	H	H	H	H	H	H	H	H	H	L	H	H
8	H	L	L	L	H	L	H	H	H	H	H	L	H	H	H	H	H	H	H	H	L	H
9	H	L	L	H	H	H	L	L	H	L	H	L	H	H	H	H	H	H	H	H	H	L
INVALID	H	L	H	L	H	H	L	H	H	L	H	H	H	H	H	H	H	H	H	H	H	H
	H	L	H	H	H	H	H	L	H	L	L	H	H	H	H	H	H	H	H	H	H	H
	H	H	L	L	H	H	H	H	H	L	L	L	H	H	H	H	H	H	H	H	H	H
	H	H	L	H	L	L	L	L	L	L	L	L	H	H	H	H	H	H	H	H	H	H
	H	H	H	L	L	L	L	H	L	L	L	H	H	H	H	H	H	H	H	H	H	H
	H	H	H	H	L	L	H	L	L	L	H	H	H	H	H	H	H	H	H	H	H	H

H = high level, L = low level

SN7473N

S-D P/N 045247

DUAL J-K FLIP-FLOPS WITH CLEAR

'73, 'H73, 'L73
FUNCTION TABLE

INPUTS				OUTPUTS	
CLEAR	CLOCK	J	K	Q	$\bar{Q}$
L	X	X	X	L	H
H	↓	L	L	Q_0	$\bar{Q}_0$
H	↓	H	L	H	L
H	↓	L	H	L	H
H	↓	H	H	TOGGLE	

'LS73
FUNCTION TABLE

INPUTS				OUTPUTS	
CLEAR	CLOCK	J	K	Q	$\bar{Q}$
L	X	X	X	L	H
H	↓	L	L	Q_0	$\bar{Q}_0$
H	↓	H	L	H	L
H	↓	L	H	L	H
H	↓	H	H	TOGGLE	
H	H	X	X	Q_0	$\bar{Q}_0$

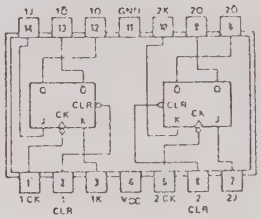

SN5473/SN7473(J, N, W)
SN54H73/SN74H73(J, N, W)
SN54L73/SN74L73(J, N, T)
SN54LS73/SN74LS73(J, N, W)

SN7474N
SN74LS74N

S-D P/N 025241
S-D P/N 103132

74

DUAL D-TYPE POSITIVE-EDGE-TRIGGERED FLIP-FLOPS WITH PRESET AND CLEAR

FUNCTION TABLE

INPUTS				OUTPUTS	
PRESET	CLEAR	CLOCK	D	Q	$\bar{Q}$
L	H	X	X	H	L
H	L	X	X	L	H
L	L	X	X	H*	H*
H	H	↑	H	H	L
H	H	↑	L	L	H
H	H	L	X	Q_0	$\bar{Q}_0$

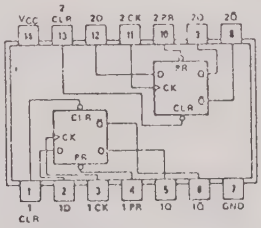

SN5474/SN7474(J, N)
SN54H74/SN74H74(J, N)
SN54L74/SN74L74(J, N)
SN54LS74/SN74LS74(J, N, W)
SN54S74/SN74S74(J, N, W)

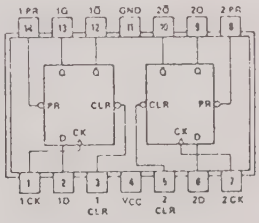

SN5474/SN7474(W)
SN54H74/SN74H74(W)
SN54L74/SN74L74(T)

SN74L75N

S-D P/N 045201

4-Bit Bistable Latches

logic

FUNCTION TABLE
(Each Latch)

INPUTS		OUTPUTS	
D	G	Q	$\bar{Q}$
L	H	L	H
H	H	H	L
X	L	Q_0	$\bar{Q}_0$

H = high level, L = low level, X = irrelevant
Q_0 = the level of Q before the high-to-low transition of G

'75 . . . J, N, OR W PACKAGE
'L75 . . . J OR N PACKAGE
(TOP VIEW)

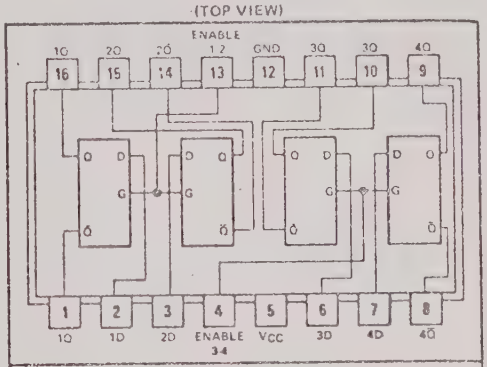

logic: see function table

description

These latches are ideally suited for use as temporary storage for binary information between processing units and input/output or indicator units. Information present at a data (D) input is transferred to the Q output when the enable (G) is high and the Q output will follow the data input as long as the enable remains high. When the enable goes low, the information (that was present at the data input at the time the transition occurred) is retained at the Q output until the enable is permitted to go high.

The '75 and 'L75 feature complementary Q and $\bar{Q}$ outputs from a 4-bit latch, and are available in various 16-pin packages. For higher component density applications, the '77 and 'L77 4-bit latches are available in 14-pin flat packages.

These circuits are completely compatible with all popular TTL or DTL families. All outputs are diode-clamped to minimize transmission-line effects and simplify system design. Series 54 and 54L devices are characterized for operation over the full military temperature range of −55°C to 125°C; Series 74 and 74L devices are characterized for operation from 0°C to 70°C.

SN7489N

S-D P/N 103219

64-Bit Read/Write Memory

J OR N DUAL-IN-LINE
OR W FLAT PACKAGE (TOP VIEW)†

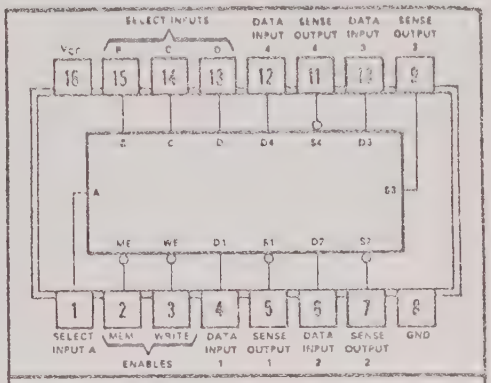

† Pin assignments for these circuits are the same for all packages.

description

This 64-bit active-element memory is a monolithic, high-speed, transistor-transistor logic (TTL) array of 64 flip-flop memory cells organized in a matrix to provide 16 words of four bits each. Each of the 16 words is addressed in straight binary with full on-chip decoding.

The buffered memory inputs consist of four address lines, four data inputs, a write enable, and a memory enable for controlling the entry and access of data. The memory has open-collector outputs which may be wire-AND connected to permit expansion up to 4704 words of N-bit length without additional output buffering. The open-collector outputs may be utilized to drive external loads directly; however, dynamic reponse of an output can, in most cases, be improved by using an external pull-up resistor in conjunction with a partially loaded output. Access time is typically 33 nanoseconds; power dissipation is typically 375 milliwatts.

FUNCTION TABLE

ME	WE	OPERATION	CONDITION OF OUTPUTS
L	L	Write	Complement of Data Inputs
L	H	Read	Complement of Selected Word
H	L	Inhibit Storage	Complement of Data Inputs
H	H	Do Nothing	High

write operation

Information present at the data inputs is written into the memory by addressing the desired word and holding both the memory enable and write enable low. Since the internal output of the data input gate is common to the input of the sense amplifier, the sense output will assume the opposite state of the information at the data inputs when the write enable is low.

read operation

The complement of the information which has been written into the memory is nondestructively read out at the four sense outputs. This is accomplished by holding the memory enable low, the write enable high, and selecting the desired address.

SN7490N

S-D P/N 025732

Decade Counters

logic

J OR N
DUAL-IN-LINE PACKAGE (TOP VIEW)

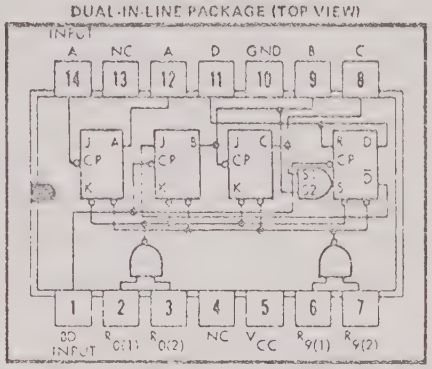

TRUTH TABLES

BCD COUNT SEQUENCE
(See Note 1)

COUNT	OUTPUT			
	D	C	B	A
0	0	0	0	0
1	0	0	0	1
2	0	0	1	0
3	0	0	1	1
4	0	1	0	0
5	0	1	0	1
6	0	1	1	0
7	0	1	1	1
8	1	0	0	0
9	1	0	0	1

RESET/COUNT (See Note 2)

RESET INPUTS				OUTPUT
$R_{0(1)}$	$R_{0(2)}$	$R_{9(1)}$	$R_{9(2)}$	D C B A
1	1	0	X	0 0 0 0
1	1	X	0	0 0 0 0
X	X	1	1	1 0 0 1
X	0	X	0	COUNT
0	X	0	X	COUNT
0	X	X	0	COUNT
X	0	0	X	COUNT

NC—No Internal Connection

NOTES: 1. Output A connected to input BD for BCD count.
2. X indicates that either a logical 1 or a logical 0 may be present.

description and typical count configurations

These high-speed, monolithic decade counters consist of four dual-rank, master-slave flip-flops internally interconnected to provide a divide-by-two counter and a divide-by-five counter. Gated direct reset lines are provided to inhibit count inputs and return all outputs to logical zero or to a binary coded decimal (BCD) count of 9. As the output from flip-flop A is not internally connected to the succeeding stages, the count may be separated in three independent count modes:

1. When used as a binary coded decimal decade counter, the BD input must be externally connected to the A output. The A input receives the incoming count, and a count sequence is obtained in accordance with the BCD count sequence truth table shown above. In addition to a conventional zero reset, inputs are provided to reset a BCD count for nine's complement decimal applications.

2. If a symmetrical divide-by-ten count is desired for frequency synthesizers or other applications requiring division of a binary count by a power of ten, the D output must be externally connected to the A input. The input count is then applied at the BD input and a divide-by-ten square wave is obtained at output A.

3. For operation as a divide-by-two counter and a divide-by-five counter, no external interconnections are required. Flip-flop A is used as a binary element for the divide-by-two function. The BD input is used to obtain binary divide-by-five operation at the B, C, and D outputs. In this mode, the two counters operate independently; however, all four flip-flops are reset simultaneously.

These circuits are completely compatible with Series 54/74 TTL and DTL logic families. Average power dissipation is 160 mW.

SN7493N S-D P/N 025715

DECADE, DIVIDE-BY-TWELVE, AND BINARY COUNTERS

'93A, 'L93 . . . 4-BIT BINARY COUNTERS

description

Each of these monolithic counters contains four master-slave flip-flops and additional gating to provide a divide-by-two counter and a three-stage binary counter for which the count cycle length is divide-by-five for the '90A and 'L90, divide-by-six for the '92A, and divide-by-eight for the '93A and 'L93.

All of these counters have a gated zero reset and the '90A and 'L90 also have gated set-to-nine inputs for use in BCD nine's complement applications.

To use their maximum count length (decade, divide-by-twelve, or four-bit binary) of these counters, the B input is connected to the Q_A output. The input count pulses are applied to input A and the outputs are as described in the appropriate function table. A symmetrical divide-by-ten count can be obtained from the '90A or 'L90 counters by connecting the Q_D output to the A input and applying the input count to the B input which gives a divide-by-ten square wave at output Q_A.

functional block diagrams

'93A . . . J, N, OR W PACKAGE (TOP VIEW)

'L93 . . . J, N, OR T PACKAGE (TOP VIEW)

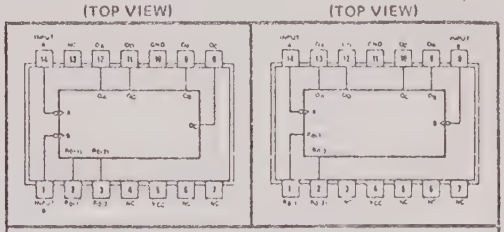

positive logic: see function tables

NC—No internal connection

TYPES	TYPICAL POWER DISSIPATION
'90A	145 mW
'L90	20 mW
'92A, '93A	130 mW
'L93	16 mW

'93A, 'L93

['93A] ['L93]

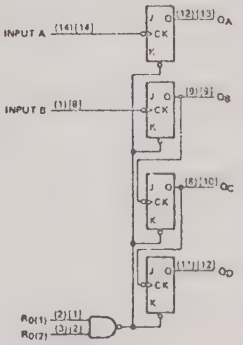

⊣◇ . . . dynamic input activated by transition from a high level to a low level.

The J and K inputs shown without connection are for reference only and are functionally at a high level.

SN7493N

S-D P/N 025715

'90A, 'L90
BCD COUNT SEQUENCE
(See Note A)

COUNT	OUTPUT			
	Q_D	Q_C	Q_B	Q_A
0	L	L	L	L
1	L	L	L	H
2	L	L	H	L
3	L	L	H	H
4	L	H	L	L
5	L	H	L	H
6	L	H	H	L
7	L	H	H	H
8	H	L	L	L
9	H	L	L	H

'90A, 'L90
BI-QUINARY (5-2)
(See Note B)

COUNT	OUTPUT			
	Q_A	Q_D	Q_C	Q_B
0	L	L	L	L
1	L	L	L	H
2	L	L	H	L
3	L	L	H	H
4	L	H	L	L
5	H	L	L	L
6	H	L	L	H
7	H	L	H	L
8	H	L	H	H
9	H	H	L	L

'90A, 'L90
RESET/COUNT FUNCTION TABLE

RESET INPUTS				OUTPUT			
$R_{0(1)}$	$R_{0(2)}$	$R_{9(1)}$	$R_{9(2)}$	Q_D	Q_C	Q_B	Q_A
H	H	L	X	L	L	L	L
H	H	X	L	L	L	L	L
X	X	H	H	H	L	L	H
X	L	X	L	COUNT			
L	X	L	X	COUNT			
L	X	X	L	COUNT			
X	L	L	X	COUNT			

'92A
COUNT SEQUENCE
(See Note C)

COUNT	OUTPUT			
	Q_D	Q_C	Q_B	Q_A
0	L	L	L	L
1	L	L	L	H
2	L	L	H	L
3	L	L	H	H
4	L	H	L	L
5	L	H	L	H
6	H	L	L	L
7	H	L	L	H
8	H	L	H	L
9	H	L	H	H
10	H	H	L	L
11	H	H	L	H

'93A, 'L93
COUNT SEQUENCE
(See Note C)

COUNT	OUTPUT			
	Q_D	Q_C	Q_B	Q_A
0	L	L	L	L
1	L	L	L	H
2	L	L	H	L
3	L	L	H	H
4	L	H	L	L
5	L	H	L	H
6	L	H	H	L
7	L	H	H	H
8	H	L	L	L
9	H	L	L	H
10	H	L	H	L
11	H	L	H	H
12	H	H	L	L
13	H	H	L	H
14	H	H	H	L
15	H	H	H	H

'92A, '93A, 'L93
RESET/COUNT FUNCTION TABLE

RESET INPUTS		OUTPUT			
$R_{0(1)}$	$R_{0(2)}$	Q_D	Q_C	Q_B	Q_A
H	H	L	L	L	L
L	X	COUNT			
X	L	COUNT			

NOTES: A. Output Q_A is connected to input B for BCD count.
B. Output Q_D is connected to input A for bi-quinary count.
C. Output Q_A is connected to input B.
D. H = high level, L = low level, X = irrelevant

schematics of inputs and outputs

'90A, '92A, '93A

EQUIVALENT OF EACH INPUT

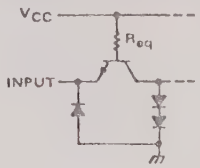

INPUT	R_{eq} NOM
A	2.5 kΩ
B ('90A, '92A)	1.25 kΩ
B ('93A)	2.5 kΩ
All resets	6 kΩ

'L90, 'L93

EQUIVALENT OF EACH INPUT EXCEPT A AND B OF 'L93

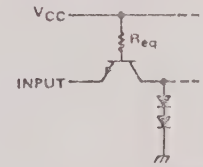

INPUT	R_{eq} NOM
A ('L90)	13.3 kΩ
B ('L90)	6.67 kΩ
All resets	40 kΩ

'L93

EQUIVALENT OF A OR B INPUT

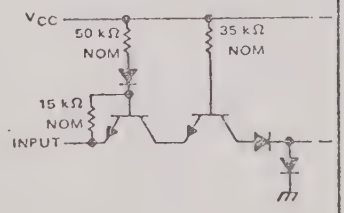

'90A, '92A, '93A, 'L90, 'L93

TYPICAL OF ALL OUTPUTS

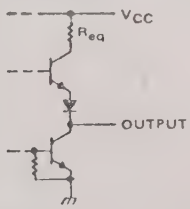

'90A, '92A, '93A: R = 100 Ω NOM
'L90, 'L93: R = 500 Ω NOM

SN74123N[5] S-D P/N 045209

RETRIGGERABLE MONOSTABLE MULTIVIBRATORS

123

DUAL RETRIGGERABLE MONOSTABLE MULTIVIBRATORS WITH CLEAR

FUNCTION TABLE

INPUTS			OUTPUTS	
CLEAR	A	B	Q	$\bar{Q}$
L	X	X	L	H
X	H	X	L	H
X	X	L	L	H
H	L	↑	⎍	⎎
H	↓	H	⎍	⎎
↑	L	H	⎍	⎎

See page 138

See Notes

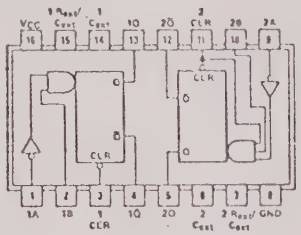

SN54123/SN74123(J, N, W)
SN54L123/SN74L123(J, N)

NOTES: A. H = high level (steady state), L = low level (steady state), ↑ = transition from low to high level, ↓ = transition from high to low level, ⎍ = one high-level pulse, ⎎ = one low-level pulse, X = irrelevant (any input, including transitions).
B. To use the internal timing resistor of '121, 'L121, '122, or 'L122, connect R_{int} to V_{CC}.
C. An external timing capacitor may be connected between C_{ext} and R_{ext}/C_{ext} (positive).
D. For accurate repeatable pulse widths, connect an external resistor between R_{ext}/C_{ext} and V_{CC} with R_{int} open-circuited.
E. To obtain variable pulse widths, connect external variable resistance between R_{int} or R_{ext}/C_{ext} and V_{CC}.

description

The '122, '123, 'L122, and 'L123 multivibrators feature d-c triggering from gated low-level-active (A) and high-level-active (B) inputs, and also provide overriding direct clear inputs. Complementary outputs are provided. The retrigger capability simplifies the generation of output pulses of extremely long duration. By triggering the input before the output pulse is terminated, the output pulse may be extended. The overriding clear capability permits any output pulse to be terminated at a predetermined time independently of the timing components R and C. Figure A below illustrates triggering the one-shot with the high-level-active (B) inputs.

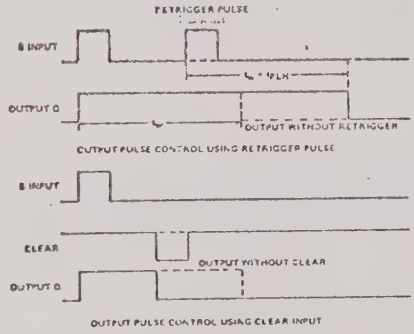

NOTE: Retrigger pulse must not start before 0.22 C_{ext} (in picofarads) nanoseconds after previous trigger pulse.

FIGURE A—TYPICAL INPUT/OUTPUT PULSES

'122, '123
TYPICAL OUTPUT PULSE WIDTH
vs
EXTERNAL TIMING CAPACITANCE

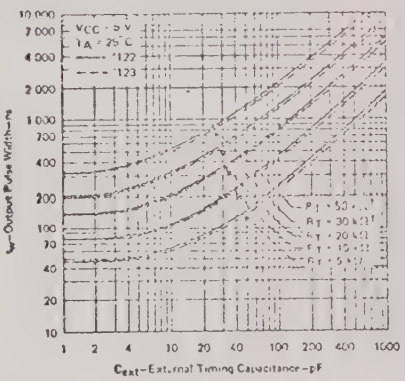

FIGURE B

These monostables are designed to provide the system designer with complete flexibility in controlling the pulse width, either to lengthen the pulse by retriggering, or to shorten by clearing. The '122 and 'L122 each has an internal timing resistor which allows the circuit to be operated with only an external capacitor, if so desired. Applications requiring more precise pulse widths (up to 28 seconds) and not requiring the clear feature can best be satisfied with '121 or 'L121.

The output pulse is primarily a function of the external capacitor and resistor. For $C_{ext} > 1000$ pF, the output pulse width (t_w) is defined as:

$$t_w = K \cdot R_T \cdot C_{ext} \left(1 + \frac{0.7}{R_T}\right)$$

where

R_T is in kΩ (either internal or external timing resistor),
C_{ext} is in pF,
t_w is in ns,
K is 0.32 for '122, 0.28 for '123, 0.37 for 'L122, 0.33 for 'L123.

For pulse widths when $C_{ext} \leq 1000$ pF, see Figures B and C.

SN74123N

S-D P/N 045209

description

The 'LS122 and 'LS123 multivibrators feature d-c triggering from gated low-level-active (A) and high-level-active (B) inputs, and also provide overriding direct clear inputs. Complementary outputs are provided. The retrigger capability simplifies the generation of output pulses of extremely long duration. By triggering the input before the output pulse is terminated, the output pulse may be extended. The overriding clear capability permits any output pulse to be terminated at a predetermined time independently of the timing components R and C. Enough Schmitt hysteresis is provided to ensure jitter-free triggering from the B inputs with transition rates as slow as 1 volt per second. Figure 1 illustrates triggering the one-shot with the high-level-active (B) inputs.

SN74LS123 . . . J OR N PACKAGE
(TOP VIEW) (SEE NOTES 2 THRU 5)

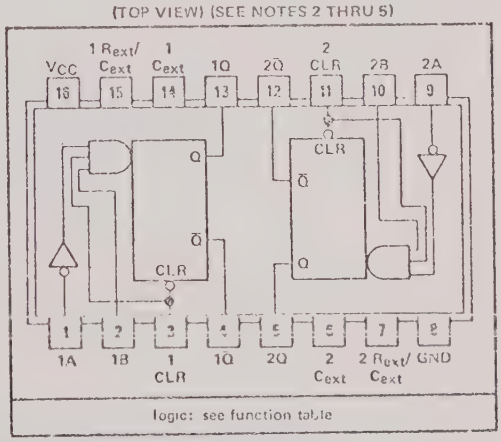

logic: see function table

NOTES: 1. H = high level (steady state), L = low level (steady state), ↑ = transition from low to high level, ↓ = transition from high to low level, ⎍ = one high-level pulse, ⎎ = one low-level pulse, X = irrelevant (any input, including transitions).
2. To use the internal timing resistor of 'LS122, connect R_{int} to V_{CC}.
3. An external timing capacitor may be connected between C_{ext} and R_{ext}/C_{ext} (positive).
4. For accurate repeatable pulse widths, connect an external resistor between R_{ext}/C_{ext} and V_{CC} with R_{int} open circuited.
5. To obtain variable pulse widths, connect external variable resistance between R_{int} or R_{ext}/C_{ext} and V_{CC}.

SN74126N S-D P/N 045298

GATES WITH 3-STATE TOTEM-POLE OUTPUTS

126

QUADRUPLE BUS BUFFER GATES
WITH THREE-STATE OUTPUTS

positive logic:
Y = A
Output is off (disabled) when C is low.

See page 142

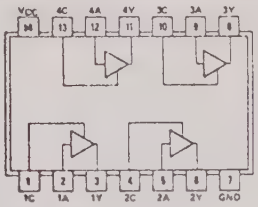

SN54126/SN74126(J, N, W)

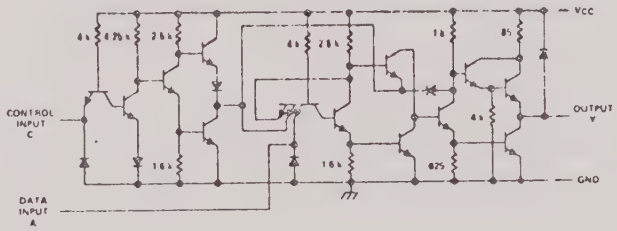

'126 CIRCUITS

Resistor values shown are nominal and in ohms.

electrical characteristics over recommended operating free-air temperature range (unless otherwise noted)

PARAMETER		TEST FIGURE	TEST CONDITIONS†		SERIES 54 SERIES 74 '125, '126			SERIES 54S SERIES 74S 'S134			UNIT
					MIN	TYP‡	MAX	MIN	TYP‡	MAX	
V_{IH}	High-level input voltage	1, 2			2			2			V
V_{IL}	Low-level input voltage	1, 2					0.8			0.8	V
V_I	Input clamp voltage	3	V_{CC} = MIN, I_I = §§				−1.5			−1.2	V
V_{OH}	High-level output voltage	1	V_{CC} = MIN, V_{IH} = 2 V, V_{IL} = 0.8 V, I_{OH} = MAX	54 Family	2.4	3.3		2.4	3.4		V
				74 Family	2.4	3.1		2.4	3.2		
V_{OL}	Low-level output voltage	2	V_{CC} = MIN, V_{IH} = 2 V, V_{IL} = 0.8 V, I_{OL} = MAX				0.4			0.5	V
$I_{O(off)}$	Off-state (high-impedance state) output current	19	V_{CC} = MAX, V_{IH} = 2 V, V_{IL} = 0.8 V	V_O = 2.4 V			40			50	μA
				V_O = 0.4 V			−40				
				V_O = 0.5 V						−50	
I_I	Input current at maximum input voltage	4	V_{CC} = MAX, V_I = 5.5 V				1			1	mA
I_{IH}	High-level input current	4	V_{CC} = MAX	V_{IH} = 2.4 V			40				μA
				V_{IH} = 2.7 V						50	
I_{IL}	Low-level input current	5	V_{CC} = MAX	V_{IL} = 0.4 V			−1.6				mA
				V_{IL} = 0.5 V						−2	
I_{OS}	Short-circuit output current♦	6	V_{CC} = MAX	54 Family	−30		−70	−40		−100	mA
				74 Family	−28		−70	−40		−100	
I_{CC}	Supply current	7	V_{CC} = MAX		See table						mA

†For conditions shown as MIN or MAX, use the appropriate value specified under recommended operating conditions.
‡All typical values are at V_{CC} = 5 V, T_A = 25°C.
§§I_I = −12 mA for SN54'/SN74' and −18 mA for SN54S'/SN74S'.
♦Not more than one output should be shorted at a time.

SN74145N

S-D P/N 025745

J OR N DUAL-IN-LINE OR
W FLAT PACKAGE (TOP VIEW)

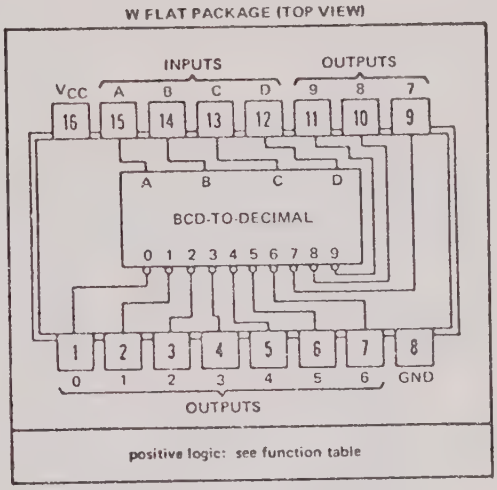

logic

FUNCTION TABLE

NO.	INPUTS				OUTPUTS									
	D	C	B	A	0	1	2	3	4	5	6	7	8	9
0	L	L	L	L	L	H	H	H	H	H	H	H	H	H
1	L	L	L	H	H	L	H	H	H	H	H	H	H	H
2	L	L	H	L	H	H	L	H	H	H	H	H	H	H
3	L	L	H	H	H	H	H	L	H	H	H	H	H	H
4	L	H	L	L	H	H	H	H	L	H	H	H	H	H
5	L	H	L	H	H	H	H	H	H	L	H	H	H	H
6	L	H	H	L	H	H	H	H	H	H	L	H	H	H
7	L	H	H	H	H	H	H	H	H	H	H	L	H	H
8	H	L	L	L	H	H	H	H	H	H	H	H	L	H
9	H	L	L	H	H	H	H	H	H	H	H	H	H	L
INVALID	H	L	H	L	H	H	H	H	H	H	H	H	H	H
	H	L	H	H	H	H	H	H	H	H	H	H	H	H
	H	H	L	L	H	H	H	H	H	H	H	H	H	H
	H	H	L	H	H	H	H	H	H	H	H	H	H	H
	H	H	H	L	H	H	H	H	H	H	H	H	H	H
	H	H	H	H	H	H	H	H	H	H	H	H	H	H

H = high level (off), L = low level (on)

functional block diagram

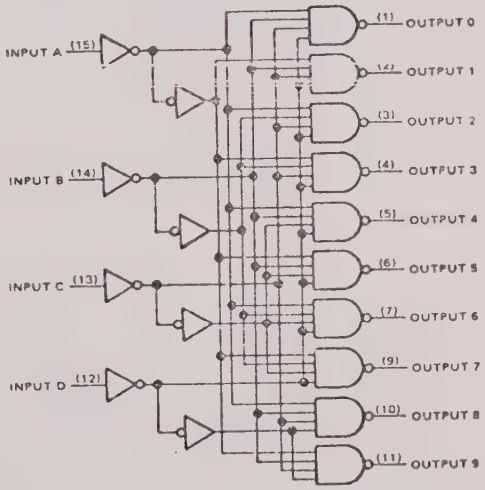

description

These monolithic BCD-to-decimal decoder/drivers consist of eight inverters and ten four-input NAND gates. The inverters are connected in pairs to make BCD input data available for decoding by the NAND gates. Full decoding of valid BCD input logic ensures that all outputs remain off for all invalid binary input conditions. These decoders feature TTL inputs and high-performance, n-p-n output transistors designed for use as indicator/relay drivers or as open-collector logic-circuit drivers. Each of the high-breakdown output transistors (15 volts) will sink up to 80 milliamperes of current. Each input is one normalized Series 54/74 load. Inputs and outputs are entirely compatible for use with TTL or DTL logic circuits, and the outputs are compatible for interfacing with most MOS integrated circuits. Power dissipation is typically 215 milliwatts.

SN74157N
SN74L157N

S-D P/N 045242
S-D P/N 103270

Quadruple 2-Line-To-1-Line Data Selectors/Multiplexers

'157, 'S157 . . . J, N, OR W PACKAGE
'L157 . . . J OR N PACKAGE
(TOP VIEW)

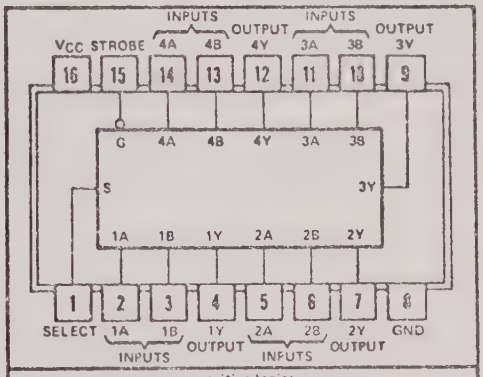

positive logic:
Low logic level at S selects A inputs.
High logic level at S selects B inputs.

description

These monolithic, data selectors/multiplexers contain inverters and drivers to supply full on-chip data selection to the four output gates. A separate strobe input is provided. A 4-bit word is selected from one of two sources and is routed to the four outputs. The '157, 'L157, and 'S157 present true data whereas the 'S158 presents inverted data to minimize propagation delay time.

FUNCTION TABLE

INPUTS				OUTPUT Y	
STROBE	SELECT	A	B	'157, 'L157, 'S157	'S158
H	X	X	X	L	H
L	L	L	X	L	H
L	L	H	X	H	L
L	H	X	L	L	H
L	H	X	H	H	L

H = high level, L = low level, X = irrelevant

absolute maximum ratings over operating free-air temperature range (unless otherwise noted)

Supply voltage, V_{CC} (see Note 1) . . . . . 7 V
Input voltage . . . . . 5.5 V
Operating free-air temperature range: SN54', SN54L', SN54S' Circuits . . . . . −55°C to 125°C
SN74', SN74L', SN74S' Circuits . . . . . 0°C to 70°C
Storage temperature range . . . . . −65°C to 150°C

NOTE 1: Voltage values are with respect to network ground terminal.

SN74LS192N

S-D P/N 103106

SYNCHRONOUS 4-BIT UP/DOWN COUNTERS (DUAL CLOCK WITH CLEAR)

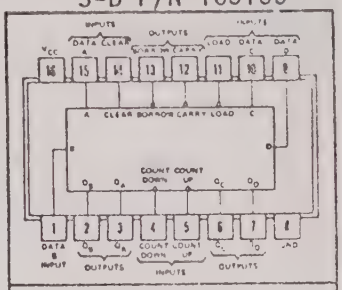

logic: Low input to load sets $Q_A = A$, $Q_B = B$, $Q_C = C$, and $Q_D = D$

(Top View)

description

These monolithic circuits are synchronous reversible (up/down) counters having a complexity of 55 equivalent gates. The '192, 'L192, and 'LS192 circuits are BCD counters and the '193, 'L193 and 'LS193 are 4-bit binary counters. Synchronous operation is provided by having all flip-flops clocked simultaneously so that the outputs change coincidently with each other when so instructed by the steering logic. This mode of operation eliminates the output counting spikes which are normally associated with asynchronous (ripple-clock) counters.

The outputs of the four master-slave flip-flops are triggered by a low-to-high-level transition of either count (clock) input. The direction of counting is determined by which count inputs is pulsed while the other count input is high.

All four counters are fully programmable; that is, each output may be preset to either level by entering the desired data at the data inputs while the load input is low. The output will change to agree with the data inputs independently of the count pulses. This feature allows the counters to be used as modulo-N dividers by simply modifying the count length with the preset inputs.

A clear input has been provided which forces all outputs to the low level when a high level is applied. The clear function is independent of the count and load inputs. The clear, count, and load inputs are buffered to lower the drive requirements. This reduces the number of clock drivers, etc., required for long words.

These counters were designed to be cascaded without the need for external circuitry. Both borrow and carry outputs are available to cascade both the up- and down-counting functions. The borrow output produces a pulse equal in width to the count-down input when the counter underflows. Similarly, the carry output produces a pulse equal in width to the count-down input when an overflow condition exists. The counters can then be easily cascaded by feeding the borrow and carry outputs to the count-down and count-up inputs respectively of the succeeding counter.

'192, 'L192, 'LS192

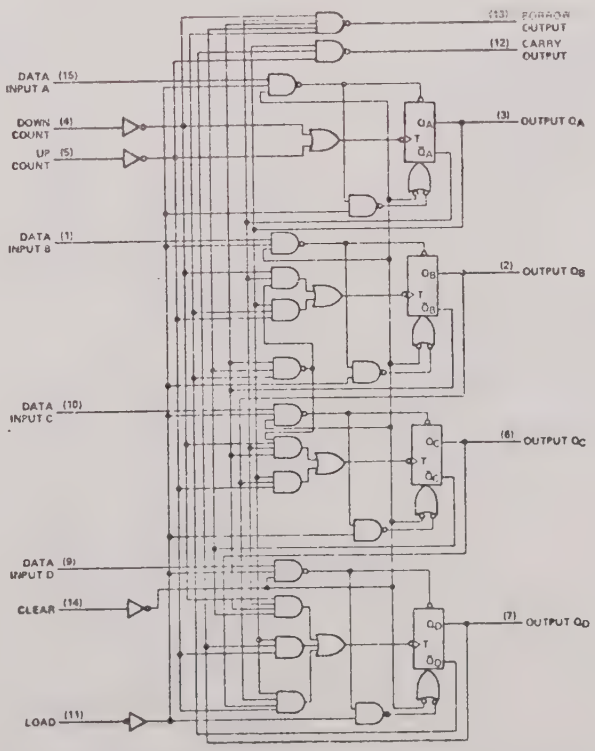

... Dynamic input activated by a transition from a high level to a low level.

SN74196N
SN74LS197N

S-D P/N 025784
S-D P/N 103165

description

These high-speed monolithic counters consist of four d-c coupled, master-slave flip-flops which are internally interconnected to provide either a divide-by-two and a divide-by-five counter ('196, 'LS196) or a divide-by-two and a divide-by-eight counter ('197, 'LS197). These four counters are fully programmable; that is, the outputs may be preset to any state by placing a low on the count/load input and entering the desired data at the data inputs. The outputs will change to agree with the data inputs independent of the state of the clocks.

During the count operation, transfer of information to the outputs occurs on the negative-going edge of the clock pulse. These counters feature a direct clear which when taken low sets all outputs low regardless of the states of the clocks.

These counters may also be used as 4-bit latches by using the count/load input as the strobe and entering data at the data inputs. The outputs will directly follow the data inputs when the count/load is low, but will remain unchanged when the count/load is high and the clock inputs are inactive.

All inputs are diode-clamped to minimize transmission-line effects and simplify system design. These circuits are compatible with most TTL and DTL logic families. Typical power dissipation is 60 milliwatts. Series 54 and 54LS circuits are characterized for operation over the full military temperature range of −55°C to 125°C; Series 74 and 74LS circuits are characterized for operation from 0°C to 70°C.

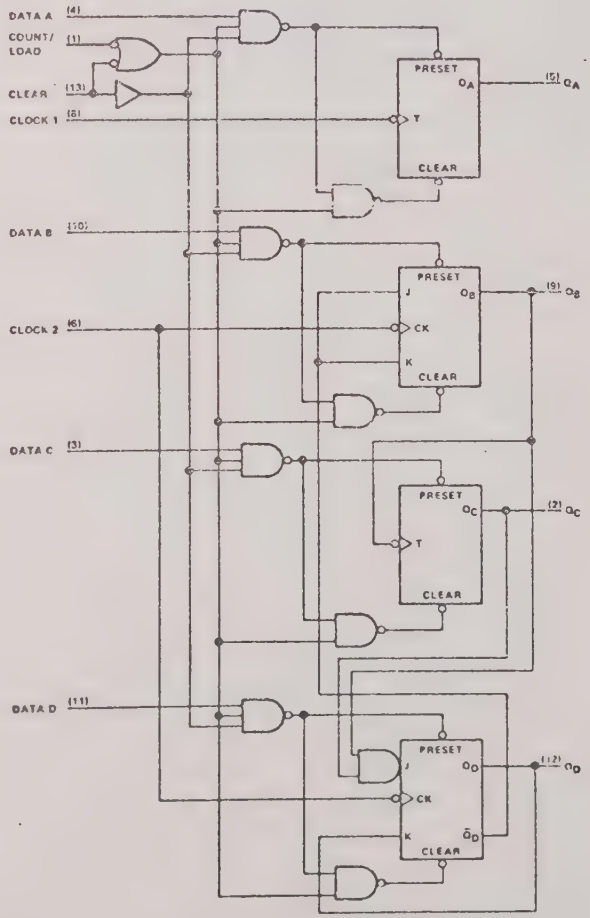

. . . dynamic input activated by transition from a high level to a low level

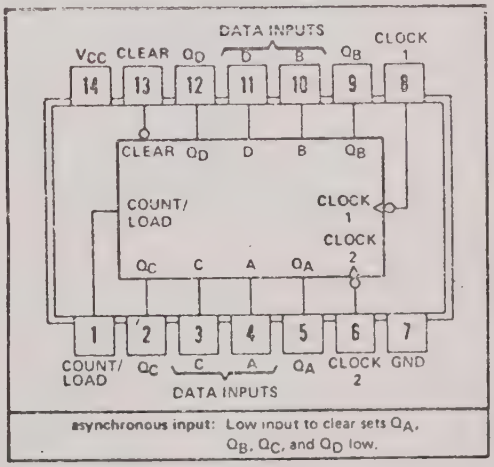

asynchronous input: Low input to clear sets Q_A, Q_B, Q_C, and Q_D low.

SN74196N
SN74LS197N

S-D P/N 025784
S-D P/N 103165

50/30 MHz Presettable Decade or Binary Counters/Latches

The output of flip-flop A is not internally connected to the succeeding flip-flops, therefore the counter may be operated in two independent modes:

1. When used as a high-speed 4-bit ripple-through counter, output Q_A must be externally connected to the clock-2 input. The input count pulses are applied to the clock-1 input. Simultaneous divisions by 2, 4, 8, and 16 are performed at the Q_A, Q_B, Q_C, and Q_D outputs as shown in the function table at right.
2. When used as a 3-bit ripple-through counter, the input count pulses are applied to the clock-2 input. Simultaneous frequency divisions by 2, 4, and 8 are available at the Q_B, Q_C, and Q_D outputs. Independent use of flip-flop A is available if the load and clear functions coincide with those of the 3-bit ripple-through counter.

FUNCTION TABLE
(See Note A)

COUNT	OUTPUT			
	Q_D	Q_C	Q_B	Q_A
0	L	L	L	L
1	L	L	L	H
2	L	L	H	L
3	L	L	H	H
4	L	H	L	L
5	L	H	L	H
6	L	H	H	L
7	L	H	H	H
8	H	L	L	L
9	H	L	L	H
10	H	L	H	L
11	H	L	H	H
12	H	H	L	L
13	H	H	L	H
14	H	H	H	L
15	H	H	H	H

H = high level, L = low level

NOTE A: Output Q_A connected to clock-2 input.

SN74LS251N S-D P/N 103220

DATA SELECTORS/MULTIPLEXERS WITH 3-STATE OUTPUTS

J OR N DUAL-IN-LINE OR
W FLAT PACKAGE (TOP VIEW)

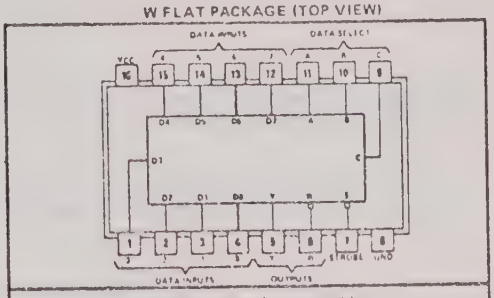

positive logic: see function table

functional block diagram

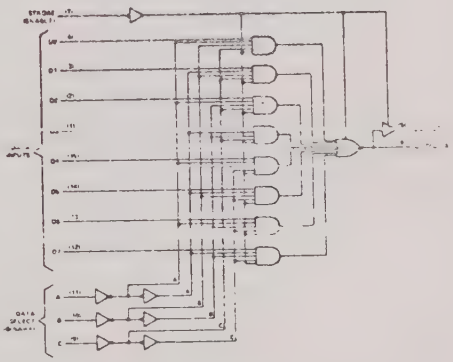

description

These monolithic data selectors/multiplexers contain full on-chip binary decoding to select one-of-eight data sources and feature a strobe-controlled three-state output. The strobe must be at a low logic level to enable these devices. The three-state outputs permit a number of outputs to be connected to a common bus. When the strobe input is high, both outputs are in a high-impedance state in which both the upper and lower transistors of each totem-pole output are off, and the output neither drives nor loads the bus significantly. When the strobe is low, the outputs are activated and operate as standard TTL totem-pole outputs

To minimize the possibility that two outputs will attempt to take a common bus to opposite logic levels, the output control circuitry is designed so that the average output disable time is shorter than the average output enable time. The SN54251 and SN74251 have output clamp diodes to attenuate reflections on the bus line.

FUNCTION TABLE

INPUTS				OUTPUTS	
SELECT			STROBE	Y	W
C	B	A	S		
X	X	X	H	Z	Z
L	L	L	L	D0	$\overline{D0}$
L	L	H	L	D1	$\overline{D1}$
L	H	L	L	D2	$\overline{D2}$
L	H	H	L	D3	$\overline{D3}$
H	L	L	L	D4	$\overline{D4}$
H	L	H	L	D5	$\overline{D5}$
H	H	L	L	D6	$\overline{D6}$
H	H	H	L	D7	$\overline{D7}$

H = high logic level, L = low logic level
X = irrelevant, Z = high impedance (off)
D0, D1 . . . D7 = the level of the respective D input

SN74LS253N S-D P/N 103221

DUAL 4-LINE-TO-1-LINE DATA SELECTORS/MULTIPLEXERS WITH 3-STATE OUTPUTS

description

Each of these Schottky-clamped data selectors/multiplexers contains inverters and drivers to supply fully complementary, on-chip, binary decoding data selection to the AND-OR gates. Separate output control inputs are provided for each of the two four-line sections.

The three-state outputs can interface with and drive data lines of bus-organized systems. With all but one of the common outputs disabled (at a high-impedance state) the low-impedance of the single enabled output will drive the bus line to a high or low logic level.

logic

FUNCTION TABLE

SELECT INPUTS		DATA INPUTS				OUTPUT CONTROL	OUTPUT
B	A	C0	C1	C2	C3	G	Y
X	X	X	X	X	X	H	Z
L	L	L	X	X	X	L	L
L	L	H	X	X	X	L	H
L	H	X	L	X	X	L	L
L	H	X	H	X	X	L	H
H	L	X	X	L	X	L	L
H	L	X	X	H	X	L	H
H	H	X	X	X	L	L	L
H	H	X	X	X	H	L	H

Address inputs A and B are common to both sections.
H = high level, L = low level, X = irrelevant, Z = high impedance (off)

functional block diagram

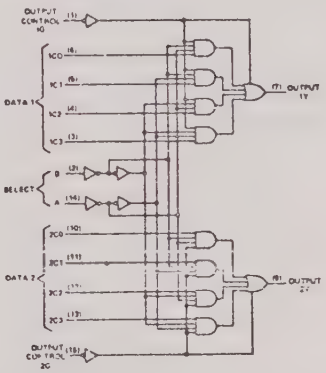

J OR N DUAL-IN-LINE OR W FLAT PACKAGE (TOP VIEW)

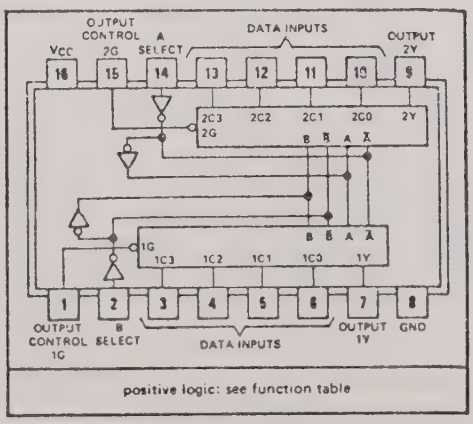

positive logic: see function table

- Flat Response to 100 MHz
- Local Oscillator IF Isolation . . . 30 dB Typ
- Local Oscillator RF Isolation . . . 60 dB Typ
- RF-IF Isolation . . . 30 dB Typ
- Conversion Gain . . . 14 dB Typ
- Use with 12-V or ±6-V Power Supplies

schematic

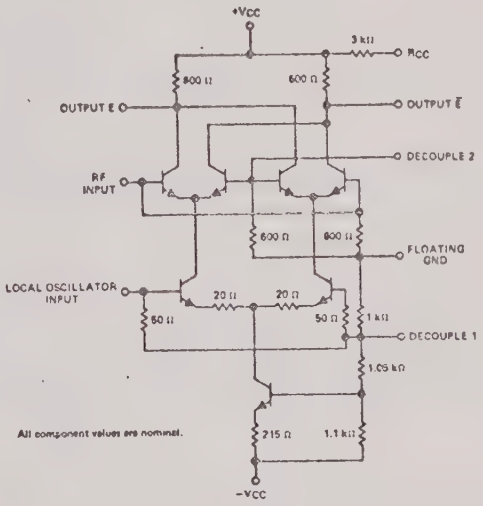

description

The SN56514 and SN76514 are doubly balanced mixers which utilize two cross-coupled, differential transistor pairs driven by a third balanced pair. The circuit features a flat response over a wide band of frequencies. The SN56514 is characterized for operation over the full military temperature range of −55°C to 125°C; the SN76514 is characterized for operation from 0°C to 70°C.

terminal assignments

J OR N DUAL-IN-LINE PACKAGE
(TOP VIEW)

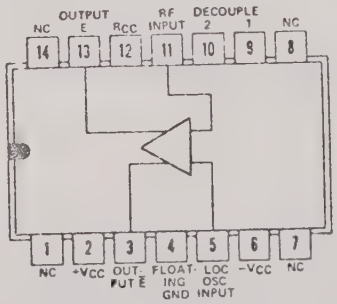

L PLUG-IN PACKAGE
(TOP VIEW)

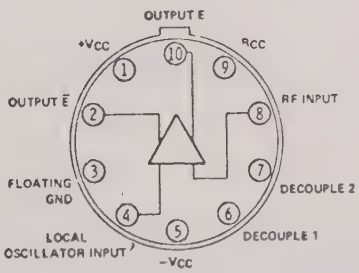

PIN 5 IS IN ELECTRICAL CONTACT WITH THE CASE

For operation from a single 12-V supply, connect the positive terminal of the supply to $+V_{CC}$, the negative terminal to $-V_{CC}$, and the floating-ground terminal to R_{CC}. For operation from two 6-V supplies, leave R_{CC} open and connect the positive terminal of one supply to $+V_{CC}$, the negative terminal of the other supply to $-V_{CC}$, and the remaining terminals of the two supplies to the floating-ground terminal. See Figure 19.

NC—No internal connection

TMS0117NC

S-D P/N 103322

10-DIGIT DECIMAL ARITHMETIC PROCESSOR

- 10 Digits, 3 Registers
- BCD Input and Output
- Direct Add, Subtract, Multiply, Divide
- Implied Constant in 4 Basic Modes
- Add to Overflow, Subtract to Zero
- Shift Left, Shift Right
- Exchange Registers
- Busy/Ready Interlocks
- On-Chip Digit Clock
- 100 ms Maximum Operation Time
- TTL Compatibility

description

The TMS 0117 NC is an MOS/LSI digital building block designed to process numerical data in BCD format. The device performs the most commonly required arithmetic operations, and numbers of up to ten digits can be processed in under 100 milliseconds.

Even when only partially utilized, the TMS 0117 provides a considerable cost saving when compared with more conventional arithmetic techniques. Its applications include automatic control systems, on-line data analysis, digital correlators, weighing machines, and computing counters/frequency meters. The device requires a minimal amount of external control logic, and complex problems may be solved by using it as a 'mini' central processor unit (CPU) in conjunction with SN74188 bipolar integrated circuit Programmable Read Only Memories (PROMs) as the microprogram store.

In addition to the four basic processes (Add, Subtract, Multiply, Divide), the TMS 0117 performs operations such as Increment, Decrement, Shift Left, Shift Right, Exchange Operands, Add to Overflow, and Subtract to Zero.

A BUSY/READY signal generated on the chip discriminates between the BUSY condition (output data invalid, no data can be entered) and the READY condition (output data valid, data can be entered).

Data input and output are in serial form.

An output clock generated on the chip can be used to off load the output data into a memory.

operation

Functions that the processor will perform may be classified into three types – arithmetic, register, and internal control ('housekeeping'). Register and simple arithmetic operations, such as data interchange and add/subtract 1, require a minimal amount of internal microprograms and are rapidly executed. More complex arithmetic operations, such as multiplication and division, use a considerable portion of the program space and take proportionately longer to execute. The time taken to carry out housekeeping instructions, e.g. reset after error flag, is variable, being dependent on the state of the internal program.

The operations are defined as follows:

- Multiply
  Multiply the contents of the output register (multiplicand) by the last data entry (multiplier) and transfer the product to the output register.

– continued

TMS0117NC S-D P/N 103322

- Divide
  Divide the contents of the output register (dividend) by the last data entry (divisor) and transfer the quotient to the output register.
- Add
  Add the last data entry to the contents of the output register.
- Subtract
  Subtract the last data entry from the contents of the output register.
- Increment
  Add 1 to the contents of the output register. (Decimal point and sign are ignored in this operation.)
- Decrement
  Subtract 1 from the contents of the output register. (Decimal point and sign are ignored.)
- Add to Overflow
  Continuously increment at the rate of 1 per D scan, the contents of the output register until overflow is reached.
- Subtract to Zero
  Continuously subtract 1 at the rate of 1 per D scan from the contents of the output register until zero is reached.
- Equal
  Execute instruction. Causes the processor to carry out the last stored instruction. Equal also sets up implied constant (last data entry and last function).
- Right Shift
  Move the contents of the output register one place toward the least significant digit (LSD).
- Left Shift
  Move the contents of the output register one place toward the most significant digit (MSD).
- Exchange Operands
  Interchange the last pair of numeric entries, e.g. a ÷ b becomes b ÷ a.
- Clear
  Clear all stored instructions and data registers.
- Reset
  Reset is a master clear and will operate under all conditions. It is used when the processor has entered a locked state, i.e. error flag, and it resets the internal programs.

timing

The basis for the timing is an external clock applied to the device. Nominal frequency of the clock is 250 kHz. An internal state time is equivalent to 3 external clock cycles. A digit time is equivalent to 13 internal state times or 39 clock cycles or nominally 156 microseconds. A digit time (D-time) corresponds to the time during which each digit is displayed. A blanking of one state time is on the leading and trailing edge of each D output signal. Eleven digit terminals are used to scan the data entry logic and to multiplex a display. Only one digit time is high at any given point.

Digits are displayed in scanning mode, thus any digit is displayed for one D-time and displayed again one D-cycle later. (A D-cycle is equivalent to 11 D-times – i.e. 1.72 milliseconds.)

A digit clock is brought out on SP (pin 24) to be used for clocking data to be stored from the TMS 0117 to a memory. The clock pulse is two state times wide (S_4 and S_5 out of 13 state times) and the data is valid on either edge of the clock as shown below. The period of the clock is one digit time (13 state times).

— continued

TMS0117NC S-D P/N 103322

TIMING DIAGRAM
One Digit Time

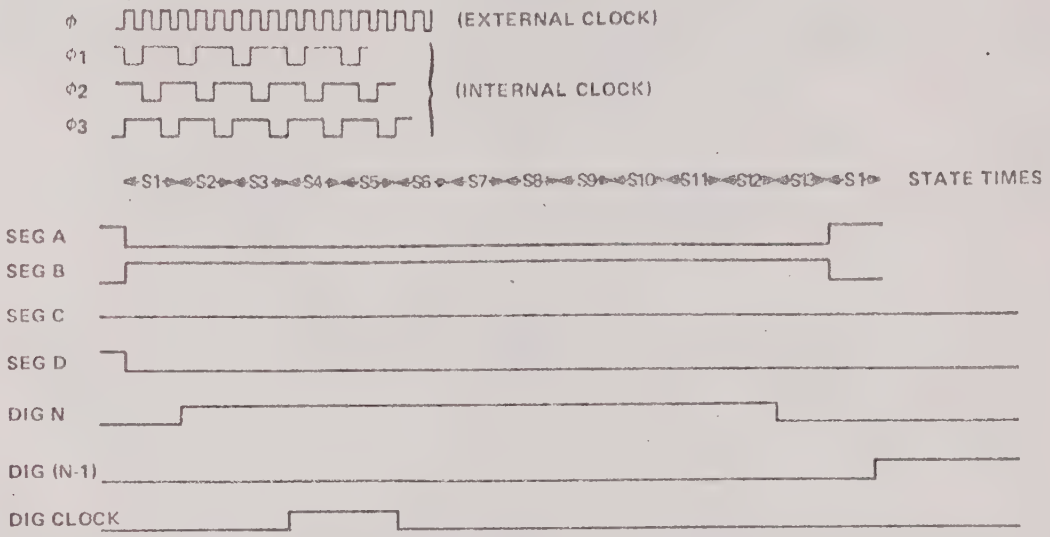

Two Digit Times, Displaying Number 97

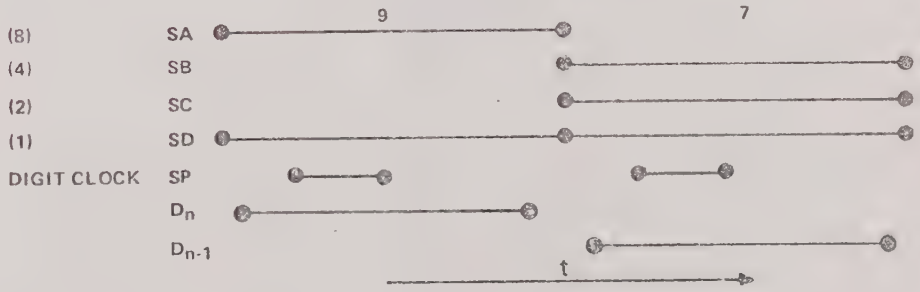

The table below shows the time required to complete the functions indicated for a nominal 250-kHz clock rate.

FUNCTION	TIME
Numer entry, single digit	5.2 ms maximum
Operation instruction entry	6.9 ms maximum
Shift left or right	1.72 ms
Increment or decrement	3.4 ms
Exchange operands	5.2 ms
Add, subtract	8.6 ms
Multiplication	70 ms (worst-case numeric inputs)
Division	80 ms (worst-case numeric inputs)
Digit cycle time	1.72 ms
Digit time	156 μs

TMS0117NC

TMS 0117 INPUTS, OUTPUTS, CONTROL TERMINALS

S-D P/N 103322

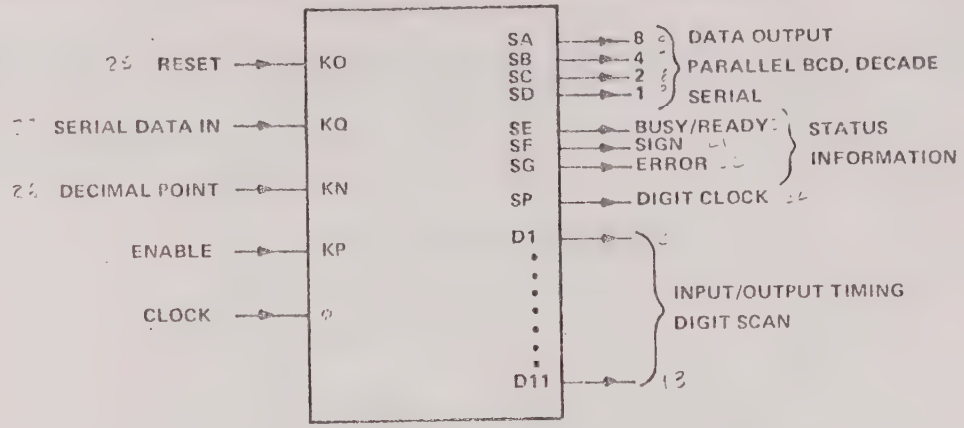

There are two types of data input, both of which are entered on the KQ terminal. They are:

- Numerical data
- Operation commands

data input

The serial data input line requires its information in the form of a serial five-bit word. Four bits are used as a data/instruction code and the fifth bit as a control. The control determines whether the four-bit code is interpreted as data or as an instruction.

INPUT CODING

CONTROL BIT				INPUT NOTATION		
2^3	2^2	2^1	2^0			
A5	A4	A3	A2	A1		
0	0	0	0	0	0	Numeric Data
0	0	0	0	1	1	
0	0	0	1	0	2	
0	0	0	1	1	3	
0	0	1	0	0	4	
0	0	1	0	1	5	
0	0	1	1	0	6	
0	0	1	1	1	7	
0	1	0	0	0	8	
0	1	0	0	1	9	
1	0	0	0	0	Clear	Instruction Codes
1	0	0	0	1	Equals	
1	0	0	1	0	Multiply	
1	0	0	1	1	Divide	
1	0	1	0	0	Add	
1	0	1	0	1	Add 1	
1	0	1	1	0	Subtract	
1	0	1	1	1	Subtract 1	
1	1	0	0	0	Add 1 to overflow	
1	1	0	0	1	Subtract 1 to zero	
1	1	0	1	0	Shift right	
1	1	0	1	1	Shift left	
1	1	1	0	0	Exchange operands	
1	1	1	0	1	No operation	Not Used
1	1	1	1	0	No operation	
1	1	1	1	1	No operation	

-- continued

TMS0117NC S-D P/N 103322

In order to reduce the number of package pins required for data entry, the five-bit code is serialized. The processor generates sequential digit strobes, D1 to D11, that enable the input data to be serialized.

The data input lines are KN, KO, KP and KQ. The boxes represent a logical or direct switch connection between the digit lines D1 to D11 and K inputs.

DATA INPUT AND DIGIT LINES

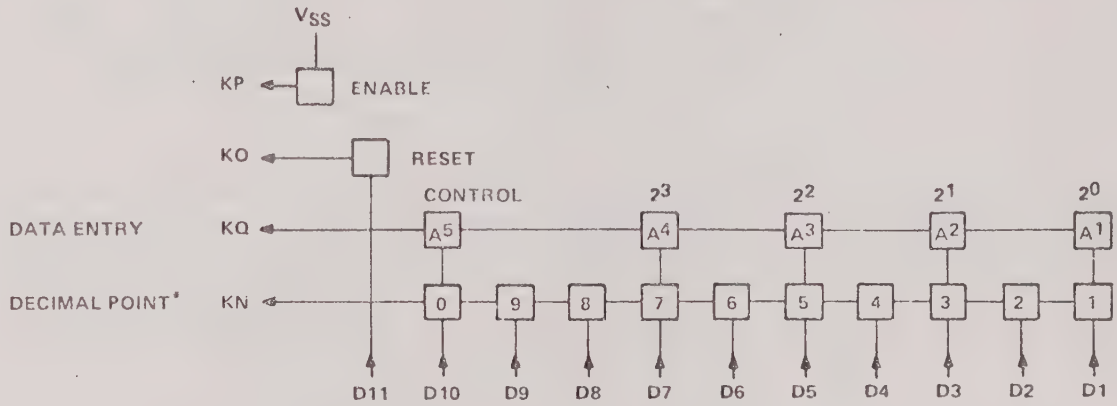

*Decimal point – one switch and only one switch permanently closed.

A gate implementation of the entry function and a simplified timing diagram are shown below.

ENTRY FUNCTION

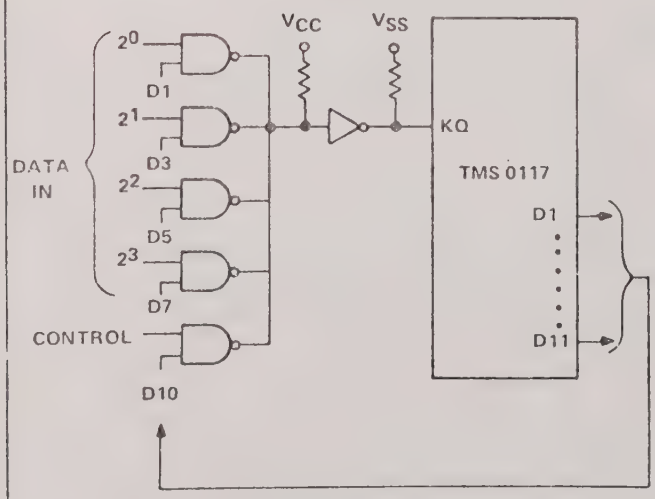

TIMING DIAGRAM

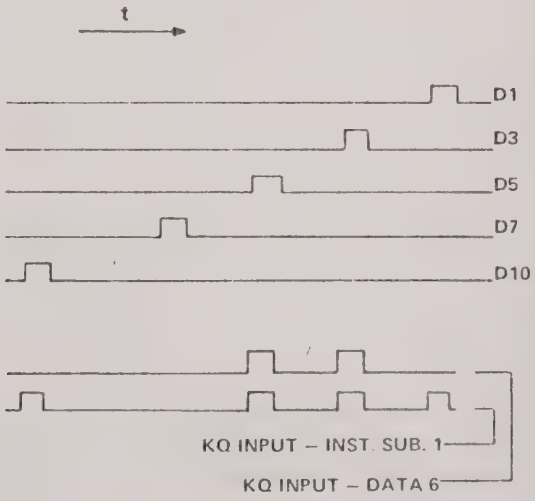

The data entries are controlled by the enable input, as described under Input Coding. Numeric entries are limited to ten digits. Any zeros that are required to fill the unused most-significant-digit positions preceding number entry (leading zeros) need not be entered; but if, from a systems point of view, it is necessary to enter them, they will be ignored by the processor. Data are entered most-significant-digit first.

– continued

The RESET terminal is an interrupt signal. It will clear all registers and status information under any conditions. This is the only key operational after the machine enters a locked state. The CLEAR opcode clears in the same manner but cannot be used once in the locked state (overflow). RESET operates independently and does not need to be followed by an ENABLE.

data output

The TMS 0117 has two types of data output – numeric and status.

numeric data

Numeric data is presented as digit serial, bit parallel, Binary Coded Decimal (BCD) during digit times D10 (MSD) to D1 (LSD) on outputs SA to SD. This serial information repeats after 11 digit times, i.e. once every digit cycle. Outputs D1 to D10 can be used to strobe an external display or indicate the beginning and end of the output data word. An output digit clock is provided on output SP to enable the user to clock output data into an external register. The digit clock timing is arranged such that output data is valid on either edge of the digit clock. Similarly digit strobes D1 to D11 also inset the data outputs.

	SA	SB	SC	SD	SE	SF	SG	DIGIT
DATA	0	0	0	0	0	0	0	0
	0	0	0	1	0	0	0	1
	0	0	1	0	0	0	0	2
	0	0	1	1	0	0	0	3
	0	1	0	0	0	0	0	4
	0	1	0	1	0	0	0	5
	0	1	1	0	0	0	0	6
	0	1	1	1	0	0	0	7
	1	0	0	0	0	0	0	8
	1	0	0	1	0	0	0	9

NOTE: Data is extracted from MSD (D10) first to LSD (D1) last.

status information

Status information, i.e. the internal state of the processor (housekeeping), is available on outputs SE to SG during D11 time. Output D11 may be used to clock outputs SE to SG into an external register.

STATUS CODING

SA	SB	SC	SD	SE	SF	SG	
0	0	0	0	1	X	0	Busy
0	0	0	0	0	X	0	Ready
0	0	0	0	0	0	0	Sign Positive
0	0	0	0	0	1	0	Sign Negative
0	0	0	0	X	X	1	Error

INTERPRETATION (where X represents a don't-care condition)

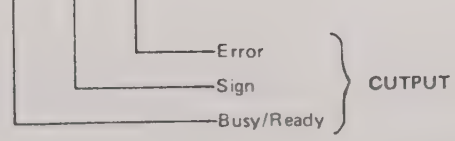

– continued

TMS0117NC S-D P/N 103322

During D11 time, outputs SA to SD are zero. Output SG indicates an error, such as numeric overflow or an invalid operation. Status outputs have the following priorities:

1) Error output SG invalidates all other numeric and status outputs. If an error indication occurs, the processor enters a locked state and must be reset.

2) Busy/ready output SE invalidates numeric and sign data, unless it indicates that the processor is ready to accept new data or instructions, i.e. only when there is no error and the ready signal is present are the sign and numeric outputs valid.

An example of the data output timing is shown below.

DATA OUTPUT TIMING EXAMPLE

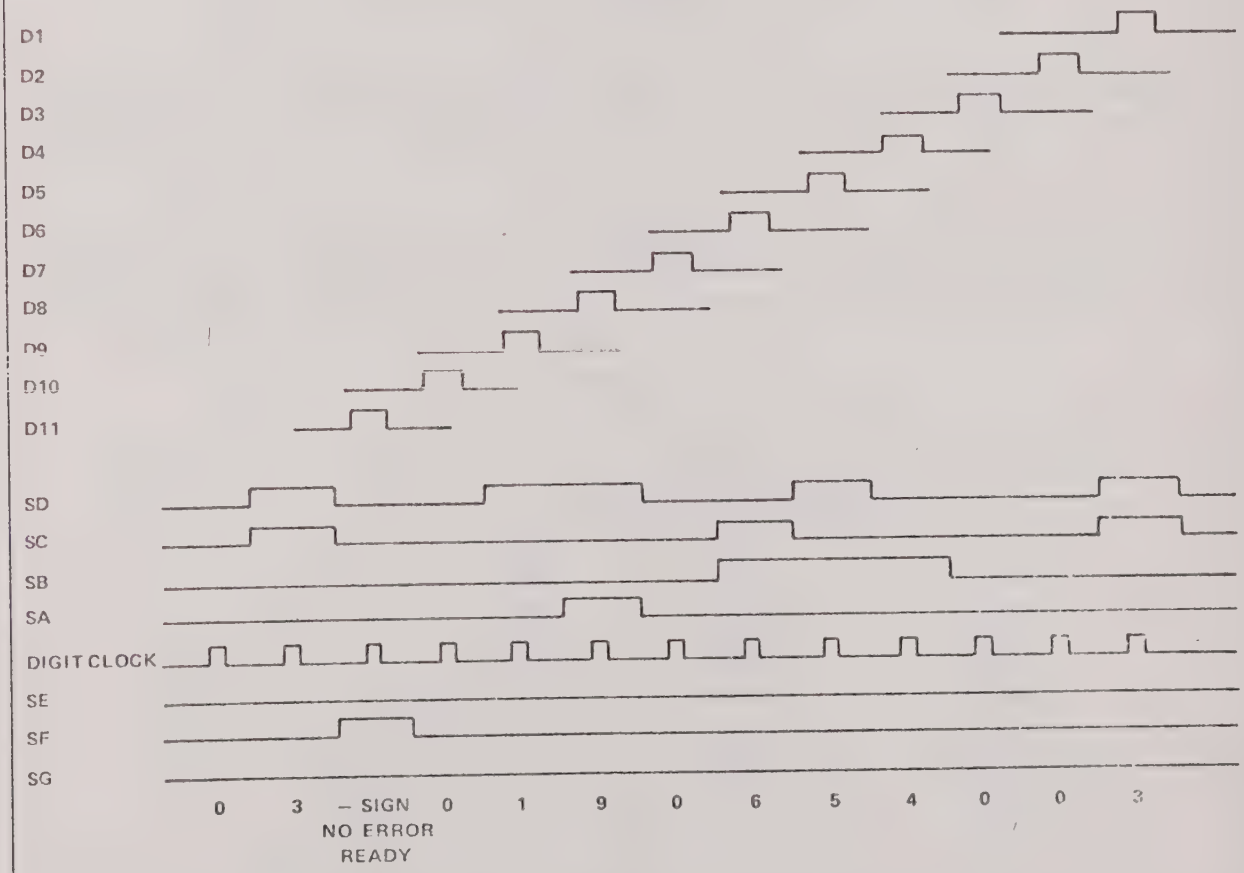

As shown, the serial output data represents –0190654003. The numeric and sign outputs are valid since the processor indicates that it is READY and there is no ERROR during D11 time.

decimal point (DP)

The processor operates in fixed-point mode on input and output. The point is not interposed between input digits, i.e., there is no input or output data code representing DP. DP is, in fact, implied by the digit time at which input KN is taken to a logic High. Decimal-point format is shown below.

– continued

DECIMAL POINT FORMAT

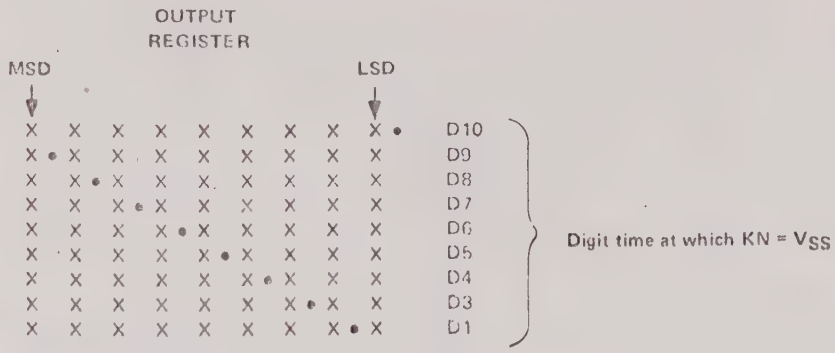

KN may be taken to a logic High by means of a fixed link with the required digit output D1 to D10. If the position is to be determined by means of logic inputs, then open collector gates can be used to determine the KN-digit connection in a manner similar to data entry.

The decimal point is not input in the normal flow of entering numbers but is set for any calculation by a switch. The position of the switch does not affect an addition or subtraction problem, but it does affect multiplication and division (see the problem set below). The decimal is not stored internally; therefore, erroneous answers will result if the decimal switch is changed while performing a series of calculations. To prevent errors, RESET or CLEAR the chip after changing the decimal-point switch.

PROBLEM SET

NUMBER ENTRY	DISPLAY		
	DECIMAL POINT AT POSITION:		
	0	2	4
500000	500000.	5000.00	50.0000
+	500000.	5000.00	50.0000
400	400.	4.00	0.0400
X	500400.	5004.00	50.0400
30000	30000.	300.00	3.0000
÷	(OVF) 0.	1501200.00	150.1200
400	(OVF) 0.	4.00	0.0400
=	(OVF) 0.	375300.00	3753.0000
RESET	0.	0.00	0.0000
1	1.	0.01	0.0001
÷	1.	0.01	0.0001
3	3.	0.03	0.0003
=	0.	0.33	0.3333
90	90.	0.90	0.0090
=	30.	30.00	30.0000
4	4.	0.04	0 0004
EXCH OP	3.	0.03	0.0003
=	0.	0.75	0.7500

NOTES 1. Decimal point is external to chip.

2. For clarity, insignificant leading zeros are not shown.

The timing of the data entry and control is determined by the enable input in conjunction with the status outputs. It is best expressed in 'digit times', i.e. the time between leading edges of successive digit pulses, and 'digit cycles', i.e. the time between leading edges of successive D1 pulses.

To initiate a data entry cycle, the enable input KP is taken to a logic High (V_{SS}). After a variable delay, the status outputs will indicate that the processor is in the BUSY mode. Data entry will be possible during the READY mode only. The TMS 0117 will ignore inputs when performing an operation. The entry cycle will last 14 to 23 D-times, depending on which digit is On when the enable connects to V_{SS}. Enable must be released within 5 D-times from BUSY signal unless a special mode of operation is desired. In the special mode the enable is kept High throughout the operation. Data inputs are changed each time the processor goes from the READY to the BUSY state until the entire sequence is completed. This speeds up data input since the processor may be ready internally to accept new data, but, because of the multiplexed output, the READY output cannot be given until D11 time. Since data entry and some operations, such as Add 1, Shift Right, etc., are short, the BUSY time will only be 1 to 3 digit cycles.

Data and instructions are entered in the same order as with a +, −, = type of keyboard. In addition to chain operations, e.g. z x b x c =, there is an implied constant. The processor retains the last operator and number entry before an Equal operation, as a constant.

The + and − code is interpreted as a sign after a Multiply or Divide operation, and as an operation at any other time. Successive Equal operations cause multiple executions of the previously stored instructions and the associated data, i.e. constant mode operation.

Examples:

	Entry	Display	Comments
1)	100	100	Display entry
	−	100	Stored as instruction
	3	3	Display entry
	=	97	Executes previous instruction
	=	94	Constant mode, instruction is sub 3, executes and displays
	−	94	Stored as instruction
	50	50	Display entry
	=	44	Executes previous instruction
	=	−6	Constant mode instruction is sub 50
	=	−56	Constant mode instruction is sub 50
2)	100	100	Display entry
	−	100	Stored as instruction
	3	3	Display entry
	+	97	Causes previous instruction to be carried out and stores current instruction.
	10	10	Display entry
	+	107	Previous instruction carried out and stores current instruction
	3	3	Display entry
	−	110	Executes previous instruction and stores current instruction
	99	99	Display entry
	−	11	Executes previous instruction and stores current instruction
	12	12	Display entry
	=	−1	Executes previous instruction and displays result

	Entry	Display	Comments
3)	−	0	Stored as sign/instruction
	5	5	Display entry
	X	−5	Enters instruction and interprets − as sign and displays
	3	3	Display entry
	=	−15	Executes previous instruction and displays result
4)	−	0	Stored as sign/instruction
	5	5	Display entry
	X	−5	Enters instruction and interprets as sign and displays
	−	−0	Enters sign and displays
	5	−5	Enters data and displays with associated sign
	=	25	Executes previous instruction and displays result
5)	100	100	Display entry
	+	100	Enters add instruction
	−	200	Enters sub instruction and executes previous instruction
	3	3	Display entry
	=	197	Executes previous instruction and displays result
6)	100	100	Display entry
	−	100	Enters sub instruction
	−	0	Enters sub instruction and executes previous instruction
	5	5	Display entry
	=	−5	Executes previous instruction and displays result

TMS0117NC S-D P/N 103322

absolute maximum ratings over operating free-air temperature range (unless otherwise noted)

Supply voltage V_{DD} range (See Note 1) . . . . . −20 V to 0.3 V
Supply voltage V_{GG} range (See Note 1) . . . . . −20 V to 0.3 V
Clock input voltage range (See Note 1) . . . . . −20 V to 0.3 V
Data input voltage range (See Note 1) . . . . . −20 V to 0.3 V
Applied output voltage range (See Note 1) . . . . . −20 V to 0.3 V
Operating free-air temperature range . . . . . 0°C to +70°C
Storage temperature range . . . . . −55°C to +150°C

NOTE 1: These voltage values are with respect to V_{SS} (substrate).

recommended operating conditions

CHARACTERISTICS	CONDITIONS	MIN	NOM	MAX	UNIT
Operating Voltages (See Note 2)					
Drain supply V_{DD} (See Note 3)		0	0	0	V
Substrate supply V_{SS}		6.6	7.2	8.1	V
Gate supply V_{GG}		−8.1	−7.2	−6.6	V
Clock Levels					
Clock high level $V_{\phi H}$		V_{SS} - 1.5	V_{SS} - 0.5	V_{SS}	V
Clock low level $V_{\phi L}$		V_{GG} -1	V_{GG}	V_{GG} +1	V
Applied Output Voltage		-0.3		18	V
Clock Timing (See Clock Timing Diagram)					
Frequency		100	250	400	kHz
Period T_1		2.5	4	10	μs
Half-period T_2		1.25	2	5	μs
Half-period T_3		1.25	2	5	μs
Clock T_r and T_f	f clock = 100 kHz	30		1000	ns
Clock T_r and T_f	f clock = 250 kHz	30		650	ns
Clock T_r and T_f	f clock = 400 kHz	30		300	ns
Input Level K Lines					
Low		V_{GG}	V_{DD}	V_{SS} -6	V
High		V_{SS} -1.5	V_{SS} - 0.5	V_{SS}	V

NOTES: 2. Effective zero suppression depends on a transient free rise of V_{SS} and V_{GG} during power up. With certain supply systems it may be necessary to capacitively damp the supplies to ensure zero suppression.

3. V_{DD} is voltage reference.

CLOCK TIMING DIAGRAM

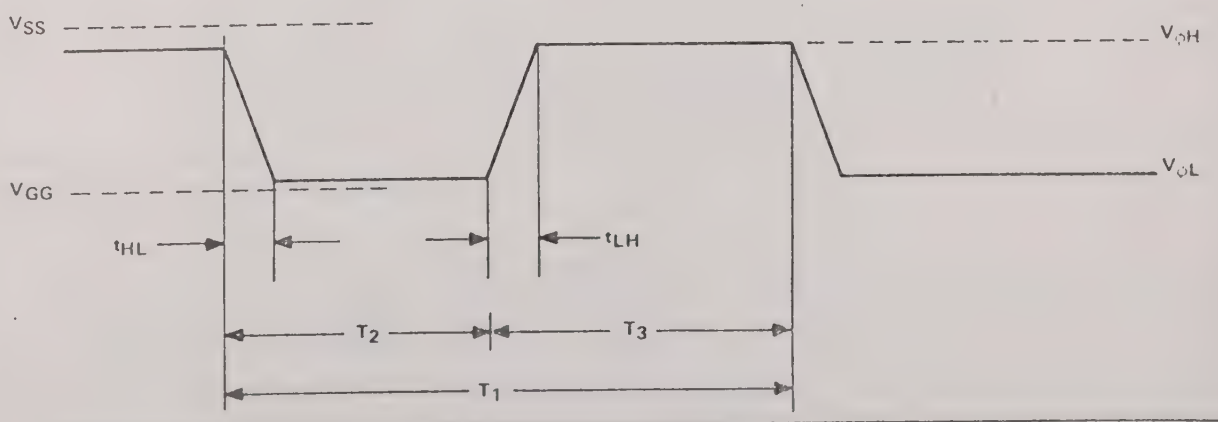

TMS0117NC S-D P/N 103322

electrical characteristics at nominal conditions over 0°C to 70°C temperature range

CONDITION	MIN	TYP†	MAX	UNIT
Input current on K lines (K input low) (All other pins GND)		0.1	10	μA
Input pull-up resistance		30		kΩ
Output leakage (off state with $V_{OUT} = V_{SS} - 10$ V) (See Note 4)		0.1	100	μA
Output resistance R_O (on state with $V_{OUT} = V_{SS} - 0.5$ V) (See Typical Output Buffer Characteristics)		250	500	Ω
Output saturation current I_{SAT}		15		mA
Clock leakage (Low Level)		0.1	100	μA
K line input capacitance ($V_K = V_{SS}$, f = 100 kHz)		2.5	5	pF
Output capacitance (f = 100 kHz)		2.0	5	pF
Clock capacitance (f = 100 kHz)		10	20	pF
Average supply current I_{GG} (See Note 4)		10	15	mA
Average supply current I_{DD} (See Note 4)		17	25	mA
Power dissipation (See Notes 4 and 5)		265	400	mW

NOTES: 4. At 25°C. Output leakage cannot be measured with a curve tracer because capacitive coupling will turn on the output.

5. Power saving techniques, including pulsing of power supplies and reduction of clocking cycle may reduce power to 100 mW. These techniques involve special screening of the device.

†All typical values are at $T_A = 25°C$.

TYPICAL OUTPUT BUFFER CHARACTERISTICS

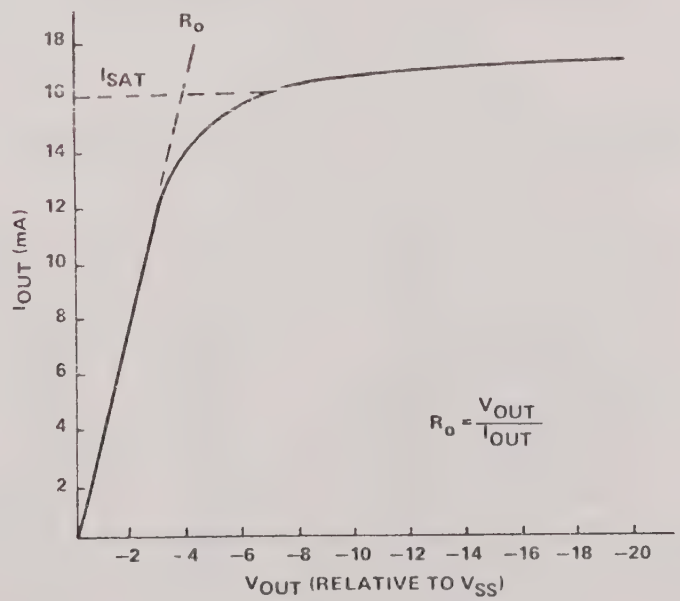

computation times (see timing section)

TTL interface

The K inputs will interpret as a logic High a voltage that lies between the substrate supply voltage V_{SS} and V_{SS} -1.5 V, and as logic Low a voltage between the gate supply voltage V_{GG} and drain supply voltage V_{DD} +1.2 V. The simplest input interface may be a TTL open-collector gate with a pull-up resistor to V_{SS}.

All data and control inputs have an internal pull-up resistor to V_{DD}. The load presented to an external driver is the internal resistor (30 kΩ) and the capacitance of the gate clamp protection diode

All outputs, D1 to D11 (data and status) are open-drain buffers. The output buffers have a typical channel resistance $r_{DS(on)}$ of 250 Ω and can supply in excess of 5 mA to V_{SS}. An economical output interface compatible with TTL is shown below.

Any output, e.g. digit clock, that is required to drive a TTL clock input should be interfaced with a Schmitt trigger, such as the SN7414N integrated circuit. The Schmitt trigger is required because the fall time of the open-drain output is of the order of 150 nanoseconds and is not directly compatible with edge-triggered TTL inputs.

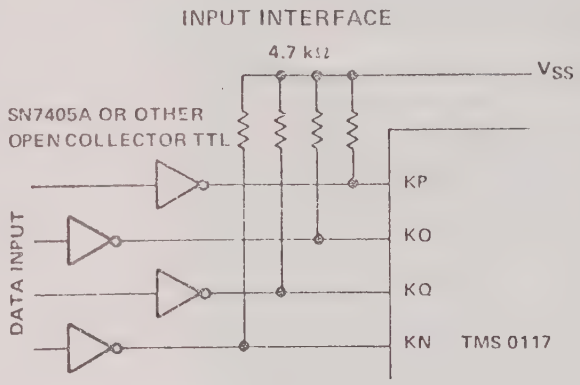

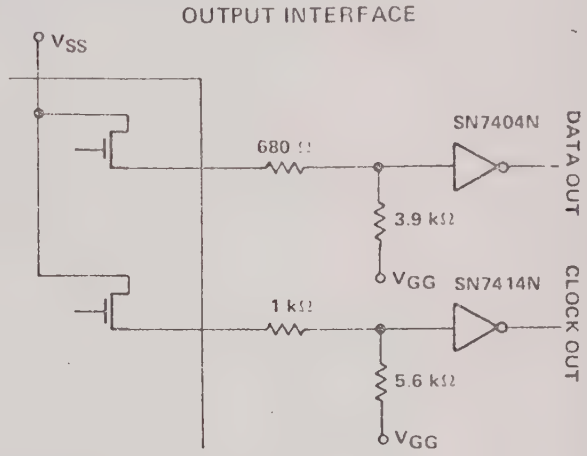

mechanical data

The TMS 0117 NC is mounted in a 28-pin plastic dual-in-line package, designed for insertion in mounting-hole rows on 0.600-inch centers.

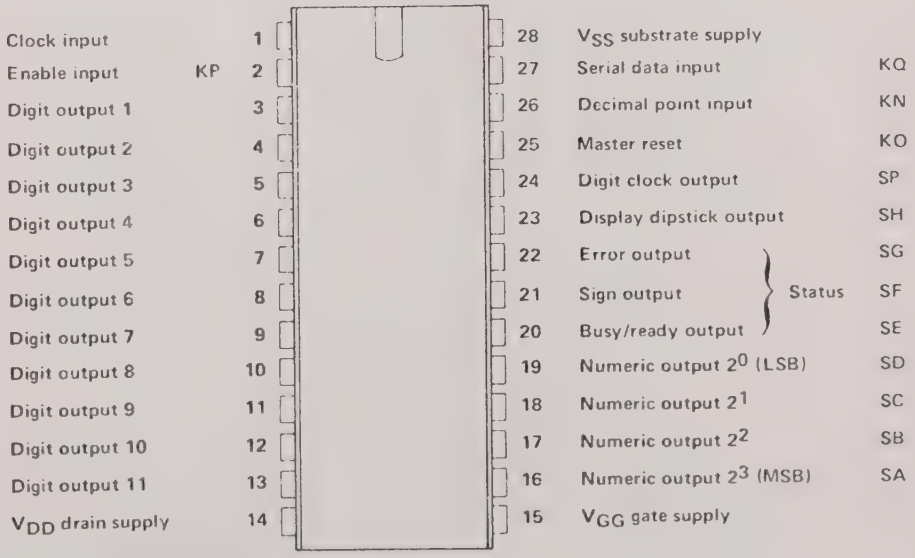

NOTES:
1. Digit outputs D1, D3, D5, D7 and D10 are used to serialize input data.
2. Digit outputs D1 – D10 are used as digit enable for numeric display.
3. Status outputs are valid during D11 time.
4. K input and S output notation per TMS 0100 NC specifications.
5. Display dipstick SH indicates the number of digits displayed in the output register by being at logic High for the relevant portion of the digit cycle. It acts as a zero suppress latch.

7808UC	S-D P/N 045265
7824UC	S-D P/N 045282
7815KC	S-D P/N 045246
7818UC	S-D P/N 045294

GENERAL DESCRIPTION — The μA7800 series of monolithic Three-Terminal Positive Voltage Regulators is constructed using the Fairchild Planar® epitaxial process. These regulators employ internal current limiting, thermal shutdown and safe-area compensation, making them essentially indestructible. If adequate heat sinking is provided, they can deliver over 1A output current. They are intended as fixed-voltage regulators in a wide range of applications including local, on-card regulation for elimination of distribution problems associated with single point regulation. In addition to use as fixed voltage regulators, these devices can be used with external components to obtain adjustable output voltages and currents and also as the power pass element in precision regulators.

- OUTPUT CURRENT IN EXCESS OF 1 AMP
- NO EXTERNAL COMPONENTS
- INTERNAL THERMAL OVERLOAD PROTECTION
- INTERNAL SHORT CIRCUIT CURRENT LIMITING
- OUTPUT TRANSISTOR SAFE-AREA COMPENSATION
- AVAILABLE IN THE TO-220 AND THE TO-3 PACKAGE
- OUTPUT VOLTAGES OF 5, 6, 8, 12, 15, 18, AND 24 VOLTS

ABSOLUTE MAXIMUM RATINGS

Input Voltage (5 V through 18 V)		35 V
(24 V)		40 V
Internal Power Dissipation (Note 1)		Internally Limited
Storage Temperature Range		−65°C to +150°C
Operating Junction Temperature Range (Note 2)	7800	−55°C to +150°C
	7800C	0°C to +125°C
Lead Temperature (Soldering, 60 second time limit)	TO-3 Package	300°C
(Soldering, 10 second time limit)	TO-220 Package	230°C

EQUIVALENT CIRCUIT

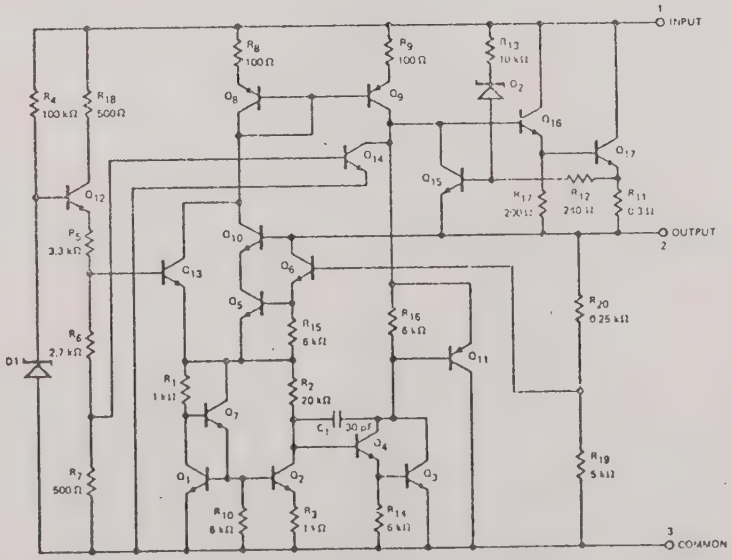

Notes on following pages.

7808UC — S-D P/N 045265
7824UC — S-D P/N 045282
7815KC — S-D P/N 045246
7818UC — S-D P/N 045294

CONNECTION DIAGRAMS
TO-220 PACKAGE
(TOP VIEW)
PACKAGE OUTLINE GH

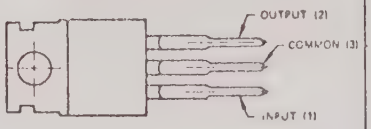

ORDER INFORMATION

OUTPUT VOLTAGE	TYPE	PART NO.
5 V	7805C	7805UC
6 V	7806C	7806UC
8 V	7808C	7808UC
12 V	7812C	7812UC
15 V	7815C	7815UC
18 V	7818C	7818UC
24 V	7824C	7824UC

TO-3 PACKAGE
(TOP VIEW)
PACKAGE OUTLINE GJ

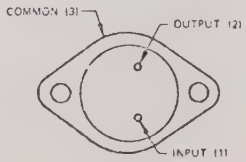

ORDER INFORMATION

OUTPUT VOLTAGE	TYPE	PART NO.
5 V	7805	7805KM
6 V	7806	7806KM
8 V	7808	7808KM
12 V	7812	7812KM
15 V	7815	7815KM
18 V	7818	7818KM
24 V	7824	7824KM
5 V	7805C	7805KC
6 V	7806C	7806KC
8 V	7808C	7808KC
12 V	7812C	7812KC
15 V	7815C	7815KC
18 V	7818C	7818KC
24 V	7824C	7824KC

*Planar is a patented Fairchild process.

93L24PC S-D P/N 117020

DESCRIPTION — The LPTTL/MSI 93L24 is a Medium Speed Expandable Comparator which provides comparison between two 5-bit words and gives three outputs, "less than", "greater than", and "equal to". A HIGH level on the active LOW enable input forces all three outputs LOW.

LOGIC SYMBOL

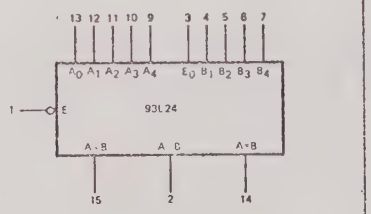

V_{CC} = Pin 16
GND = Pin 8

CONNECTION DIAGRAMS
DIP (TOP VIEW)

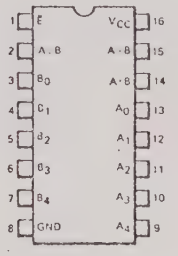

PIN NAMES		LOADING HIGH	LOADING LOW
$\bar{E}$	Enable (Active LOW) Input	1.0 U.L.	0.5 U.L.
A_0, A_1, A_2, A_3, A_4	Word A Parallel Inputs	1.0 U.L.	0.5 U.L.
B_0, B_1, B_2, B_3, B_4	Word B Parallel Inputs	1.0 U.L.	0.5 U.L.
A < B	A Less than B Output	9 U.L.	2.25 U.L.
A > B	A Greater than B Output	9 U.L.	2.25 U.L.
A = B	A Equal to B Output	10 U.L.	2.5 U.L.

1 Unit Load (U.L.) = 40μA HIGH/1.6mA LOW.

LOGIC DIAGRAM

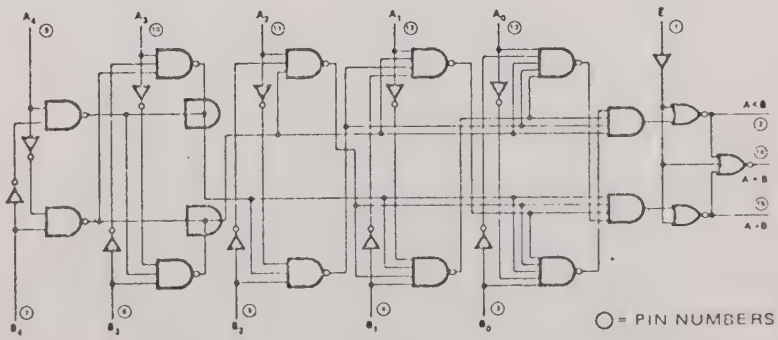

93L24PC S-D P/N 117020

FUNCTIONAL DESCRIPTION – The 93L24 5-bit comparator uses combinational circuitry to directly generate "A greater than B" and "A less than B" outputs. As evident from the logic diagram, these outputs are generated in only three gate delays. The "A equals B" output is generated in one additional gate delay by decoding the "A neither less than nor greater than B" condition with a NOR gate. All three outputs are activated by the active LOW enable input ($\bar{E}$).

Tying the A > B output from one device into an A input on another device and the A < B output into the corresponding B input permits easy expansion as shown in Figure 1.

The A_4 and B_4 inputs are the most significant inputs and A_0, B_0 the least significant. Thus if A_4 is HIGH and B_4 is LOW, the A > B output will be HIGH regardless of all other inputs except $\bar{E}$.

TRUTH TABLE

$\bar{E}$	A B	A < B	A > B	A = B
H	X X	L	L	L
L	Word A = Word B	H	H	H
L	Word A > Word B	L	H	L
L	Word A < Word B	H	L	L

L = LOW Voltage Level
H = HIGH Voltage Level
X = Either HIGH or LOW Voltage Level

053377 S-D P/N 053377

THUMBWHEEL SWITCH

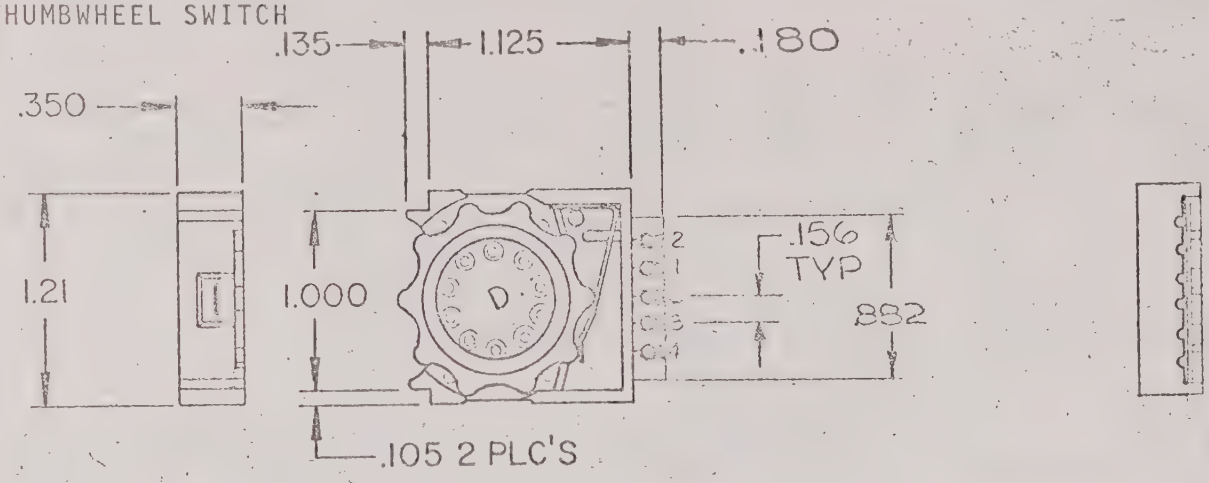

CONNECTOR COMPATIBILITY	NONE
PRINTED CIRCUIT BOARD MATERIAL	.031 FIBERGLASS, PER MIL-P-13949, TYPE GF, PLATED ON ONE SIDE.
TYPE OF TERMINATION	.040DIA. NOT PLATED THRU HOLES FOR SOLDERED WIRE CONNECTIONS.
ADDITIONAL INFORMATION	FOR ASSEMBLY AND INSTALLATION DATA, REFER TO DIGITRAN DRAWING 29-93006.

DIAL READS	DIAL POS.	COMMON "C" CONN. TO:			
		1	2	4	8
0	0				
1	1	○			
2	2		○		
3	3	○	○		
4	4			○	
5	5	○		○	
6	6		○	○	
7	7	○	○	○	
8	8				○
9	9	○			○

3 MHz Osc. #033428-1 S-D P/N 03342801

FREQUENCY: 3.0 MHz

AGING RATE: 3 parts in 10^9 /day after 72 hours continuous application of power.

WARM-UP: ±1 part 10^9 /hour, and 3 parts in 10^9 /day after 72 hours.

±1 part 10^6/hour	±1 part 10^7/hour	±5 parts 10^9/hour
1/2 hour	1 hour	2 hours

STABILITY: $\frac{\Delta F}{F}$

Short Term stability	2 parts 10^{10} rms
Averaging time	1 second
Stability with temperature	less than ±9 x 10^9 from -20°C to +25°C.
Ambient change	less than ±7 x 10^9 from +25°C to +60°C.
Stability with voltage	±5 parts 10^{10} max.
Input change	28 Vdc ±1V.
Stability with load	±3 parts 10^9 max.
Resistance change	±10%
Stability with vibration	±2 parts 10^8 max.
5-55 cps, .016" DA	meets Mil-Std-167.
Stability with shock 50G, 11 MS (Mil-Std-202A)	±1 part 10^8 max. method 202A.

INPUT VOLTAGE: 28 Vdc, ±1V negative ground

OUTPUT VOLTAGE: >1.0 Vrms into 1K load.

POWER CONSUMPTION (Approximately): Oscillator at 28 Vdc: Less than 12 watts under any condition.

COARSE FREQUENCY ADJUST RANGE: 1 part 10^5 min.

FINE FREQUENCY ADJUST RANGE: 4 parts 10^8 min.

Minimum Resolution: 1 part 10^{10}.

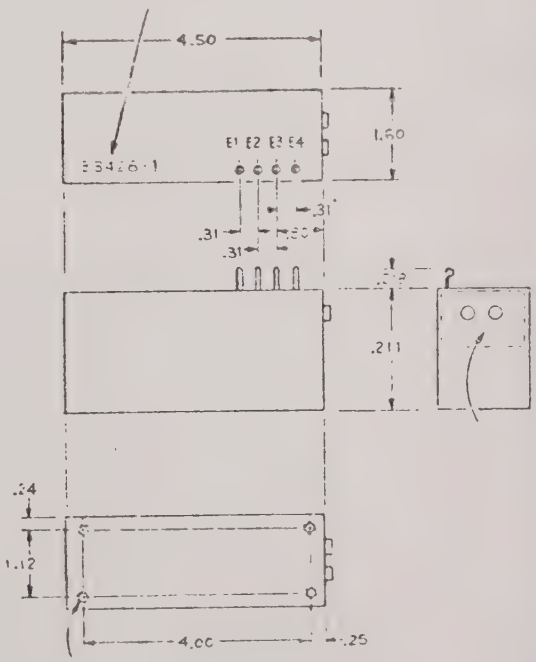

100 MHz Osc. #1344 S-D P/N 053535

f_o = 100 MHz
C_o = 3.5 pF ±10%
C_m = 5 x 10^{-4} pF ±10%

5th Overtone at cut

Series Resistance = 80Ω

Spurious Mode to Series Resistance

-20 dB	10-50 kHz
-40 dB	0-10 kHz

Drift = ±.5 x 10^{-6} parts @ 60° to 70° C.

Setting Tolerance = ±5 x 10^{-6} parts @ 65° C.

Aging Rate = 2 x 10^{-6} PPM/4 wks after 72 hours of operation @ 65° C.

Case = TO-5 Can

CHAPTER 6
PARTS LISTS

6.1 INTRODUCTION

This chapter contains the spare parts lists for each assembly in the Synthesizer Driver. Chapter 7 shows the assemblies where the listed parts are installed. Ordering information is included and should be used when purchasing parts from the factory. The parts are contained in the Replaceable Parts Lists. Explanation of the column listings and a Manufacturer's Code-To-Name Index are also included.

6.2 PART ORDERING INFORMATION

To order a part from the Replaceable Parts List, state the Systron-Donner part number, indicate the quantity required and address the order to the nearest Systron-Donner Sales or Service Center.

To order a part not listed in the Replaceable Parts List, state the instrument model number, instrument serial number, and description and function of the part, and the number of parts required. Address the order to the nearest Systron-Donner Sales or Service Center.

6.3 PARTS LISTS

Table 6-1 provides a listing of the assembly parts lists and page numbers. Table 6-2 gives the Code-To-Name information for the manufacturers listed in the replaceable parts lists in numeric order.

Each column in the parts lists provides specific information relating to the listed parts as follows:

(1) ITEM/REF: Reference numbers applicable to assemblies are listed typically in alpha-numeric order in the REF column with numeric callouts listed in the ITEM colum.

(2) COMPONENT NOMENCLATURE AND DESCRIPTION: Component names and specifications are provided in these columns and include value, tolerance, wattage rating, working voltage, construction, etc.

(3) MANUFACTURER'S CODE: H4-2 Federal Supply Code numbers are listed to identify component manufacturers. A Manufacturers Index is provided in this chaper for cross-reference.

(4) MANUFACTURER'S PART NUMBER: True manufacturer part numbers are listed in this column.

(5) S-D STOCK NUMBER: The Systron-Donner stock number is listed in this column.

(6) T/Q (Total Quantity): This quantity, appearing after an item entry, indicates the number of times the component is used in that assembly.

TABLE 6-1 PARTS LISTS LOCATION

TITLE	ASSEMBLY NUMBER	PAGE NUMBER
Shipping Assembly	057500	6-12
Test Assembly	057499	6-14
Chassis Assembly	057497	6-16
Left Gusset Assembly	053579	6-18
Rear Panel Assembly	053578	6-19
A1, Switch Assembly	05314601	6-20
Opt. 09 A1, Switch Assembly	05314603	6-20
Opt. 02 A1, Switch Assembly	05314602	6-20
Opt. 02,09 A2; A5 VCO ÷N PC Assembly	05310804	6-21
Opt. 02,09 A3 VCO ÷N PC Assembly	05310801	6-25
Opt. 02,09 A4 VCO SUM PC Assembly	05350201	6-29
Opt. 02,09 A5; A7,A9 VCO ÷N PC Assembly	05310802	6-34
Opt. 02,09 A6; A8,A10 VCO SUM PC Assembly	05350202	6-35
A11, ÷N PC Assembly	05310805	6-36
A12, 10 MHz Reference PC Assembly	05702301	6-39
A13, Remote Board PC Assembly	05391901	6-43
Opt. 05 A13, Remote Board PC Assembly	05391902	6-44
Opt. 06 A13, IEEE-388(2) PC Assembly	05739401	6-45
A14, Frequency Control PC Assembly	05392801	6-47
Opt. 05 A14, Frequency Control PC Assembly	05392802	6-49
Opt. 09 A14, Frequency Control PC Assembly	05392803	6-50
Opt. 09,05 A14, Frequency Control PC Assembly	05392804	6-51
Opt. 09 A15, Multi Computer Calculator PC Assembly	05399201	6-52
A16, D/A Converter PC Assembly	05550201	6-55
Opt. 09 A17, Multi Computer Logic PC Assembly	05393101	6-56
Opt. 09 A18, D/A Multi Computer PC Assembly	05392001	6-58
A19, Remote Board PC Assembly	05741501	6-60
Opt. 09 A19, Remote Board PC Assembly	05741502	6-61
Opt. 06 A19, IEEE-488(1) PC Assembly	05743001	6-62
A20, Lock Indicator PC Assembly	05373301	6-65
A21, 100 MHz Reference PC Assembly	05732701	6-67
A22, IF Phase Detector Assembly	055058	6-71
A22A1, 11-21 MHz IF Board PC Assembly	05504101	6-72
A23, Output SUM Oscillator Assembly	055065	6-76
A23A1, Oscillator Buffer Board PC Assembly	05524701	6-77
A24, Power Supply Board PC Assembly	05595601	6-80
A25, Output ÷N Oscillator Assembly	055256	6-81
A25A1, Oscillator Buffer Board PC Assembly	05524702	6-82

TABLE 6.2 MANUFACTURER'S CODE-TO-NAME INDEX

CODE	NAME	ADDRESS
00779	Amp. Inc.	P.O. Box 3608, Harrisburg, PA. 17105
00853	Sangamo Electric Co. So. Carolina Div.	P.O. Box 128, Pickens, So. Carolina 29671
01121	Allen Bradley Co.	1201 S. 2nd St., Milwaukee, Wis. 53204
01295	Texas Instruments Inc. Semiconductor & Components Div.	13500 North Central Expressway Dallas, Texas 75231
02114	Ferroxcube Corp.	P.O. Box 359, Mt. Marion Rd. Saugerties, N.Y. 12477
02660	Amphenol Corp.	2801 S. 25th Ave., Broadview, Ill. 60153
02735	RCA Corp. Solid State Div.	Route 202 Somerville, N.J. 08876
02768	Illinois Tool Works, Inc. Fastex Div.	195 Algonquin Rd. Des Plaines, Ill. 60016
03296	Nylon Molding Corp.	40 Brown St., Springfield, N.J. 07081
03508	General Electric Company Semiconductor Prod. Dept.	Electronics Park Syracuse, N.Y. 13201
03797	Genisco Technical Corp. Eidema Div.	18435 Susana Rd. Compton, CA. 90221
03877	Transitron Electronic Corp.	168-186 Albion St. Wakefield, MA. 01880
04453	Arnolt Corp. (Code changed to 91515)	P.O. Box 540, Warsaw, In. 46580
04713	Motorola Semiconductor Products Div.	5005 East McDowell Rd. Phoenix, Ariz. 85008
05245	Components Corp.	2857 N. Halsted St., Chicago, Ill. 60657
05464	Industrial Electronic Engineers Inc.	7720 Lemona Ave., Van Nuys, CA. 91405
05574	Viking Industries Inc.	21001 Nordhoff, Chatsworth, CA. 91311
05720	Omark Industries, Inc.	2100 S.E. Milport Rd., Portland, Ore. 97222

TABLE 6.2 MANUFACTURER'S CODE-TO-NAME INDEX (CONT)

CODE	NAME	ADDRESS
05820	Wakefield Engineering Inc.	Audubon Rd., Wakefield, MA. 01880
06383	Panduit Corp.	17301 Ridgeland, Tinley Park, Ill. 60477
06540	Amatom Electronic Hardware Division of Mite Corp.	81 Rockdale Ave. New Rochelle, N.Y. 10806
06560	Airco Speer Electronics Division of Air Reduction Co. Inc.	P.O. Box 1692, Grand Plaza, 945 Grand Ave., Nogales, Ariz. 85621
06776	Robinson Nugent Inc.	P.O. Box 470, New Albany, In. 47150
07109	Oaktron Industries Inc.	704 30th Street, Monroe, Wis. 53566
07126	Digitran Co.	855 So. Arroyo Parkway, Pasadena, CA. 91109
07263	Fairchild Camera & Instrument Corp. Semiconductor Div.	313 Frontage Rd. Mountain View, CA. 94040
07293	Bratu Engineering Co.	2048 Rascher Ave., Chicago, Ill. 60625
07700	Technical Wire Products Inc.	129 Dermody St., Cranford, N.J. 07016
07933	Raytheon Co. Semiconductor Div. HQ	350 Ellis St., Mountain View, CA. 94040
08289	Blinn Delbert Co. Inc.	1678 Mission Blvd., P.O. Box 2007 Pomona, CA. 91766
08547	Wallace R. G. Co. Inc.	2301 E. Del Amo Blvd., Compton, CA. 90220
08730	Vemaline Products Co. Inc.	P.O. Box 3, 455 West Main St. Wyckoff, N.J. 07481
09353	C & K Components Inc.	103 Morse, Newton, Mass. 02158
11236	CTS of Berne Inc.	406 Parr Rd., Berne, In. 46711
11237	CTS Keene Inc.	Paso Robles, CA. 93446
11879	Holloway Kenneth C Inc.	16680 Armstrong Ave., Santa Ana, CA. 92705
12014	Chicago Rivet & Machine Co.	950 So. 25th Ave., Bellwood, Ill. 60104

TABLE 6.2 MANUFACTURER'S CODE-TO-NAME INDEX (CONT)

CODE	NAME	ADDRESS
12517	Component Research Co. Inc.	1717 19th St., Santa Monica, CA. 90404
13103	Thermalloy Co.	2021 W. Valley View Lane, Dallas, Tex. 75234
13715	Fairchild Camera & Instrument Corp Semiconductor Div., Diode Plant	4300 Redwood Hwy. San Rafael, CA. 94903
14752	Electro Cube Inc.	1710 So. Del Mar Ave. San Gabriel, CA. 91776
15513	Data Display Products	8036 Westlawn Ave., Los Angeles, CA. 90045
15542	Mini-Circuits Laboratory Div. of Scientific Components Corp.	2913 Quentin Rd. Brooklyn, N.Y. 11229
15636	Elec-Trol Inc.	26477 No. Golden Valley Rd. Saugus, CA. 91350
15818	Teledyne Semiconductor	1300 Terra Bella Ave. Mountain View, CA. 94040
16179	Omni Spectra Inc.	24600 Hallwood Ct., Farmington, MI 48024
16258	Space Lok Inc.	2526 No. Ontario, Burbank, CA. 91504
16299	Corning Glass Works Electronic Components Div.	3900 Electronics Dr. Raleigh, N.C. 27604
16428	Belden Corp.	P.O. Box 341, Richmond, In. 47374
16733	Phelps Dodge Communications Co. Div. of Phelps Dodge Copper Products Corp.	North Haven, CT. 06473
18324	Signetics Corp.	811 E. Arques, Sunnyvale, CA. 94086
18489	Reliable Capacitor Co.	7409 Bell Aire Ave. North Hollywood, CA. 91605
18612	Vishay Resistor Products Div. Vishay Intertechnology Inc.	68 Lincoln Hwy, Malvern, PA. 19355
19701	Mepco/Electra Inc. Electra Div.	P.O. Box 760, Mineral Wells, Tex. 76067

TABLE 6.2 MANUFACTURER'S CODE-TO-NAME INDEX (CONT)

CODE	NAME	ADDRESS
20908	Electronic Concepts Division A-T-O Inc	P.O. Box 813, Rt. 29 No. Charlottesville, VA. 22904
21192	Excelsior Hardware Co.	39 Woodland Ave., Stamford, Conn. 06904
21604	Buckeye Stamping Co.	Columbus, Ohio 43207
22591	Fire Control Engineering Co.	P.O. Box 2371, Fort Worth, Tex. 76101
23172	Alpha Wire Corp. (New Code 92194)	Elizabeth, N.J.
23880	Stanford Applied Engineering Inc.	340 Martin Ave., Santa Clara, CA. 95050
23936	Pamotor Division William J. Purdy Co.	770 Airport Blvd., Burlingame, CA. 94010
24335	Cooper Laboratories Inc.	Mystic, CT.
24655	General Radio	300 Baker Ave., Concord, MA. 01742
25088	Siemens Corp.	186 Wood Ave., So. Iselin, N.J. 08830
25120	Piezo Technology Inc.	P.O. Box 7877, 2400 Diversefield Way Orlando, Florida 32804
25403	Amperex Electronic Corp. Semiconductor & Microcircuits Div.	Providence Pike, Slatersville, R.I. 02876
26695	Compac Corp. Kleen-Stik Products Div.	420 Frelinghuysen Ave. Newark, N.J. 07114
26806	American Zettler Inc.	697 Randolph Ave., Costa Mesa, CA. 92626
27014	National Semiconductor Corp.	2950 San Ysidro Way, Santa Clara, CA. 95051
27018	Optimum Designs Inc.	152 W. 42nd St., New York, N.Y. 10017
27264	Molex Products Co.	5224 Katrine Ave., Downers Grove, Ill. 60515
27556	IMB Electronic Prod. Inc.	15401-E Carmenita Rd., Santa Fe Springs, CA. 90670
28480	Hewlett-Packard Co.	1501 Page Mill Rd., Palo Alto, CA. 94304
28520	Heyman Mfg. Co.	147 N. Michigan Ave., Kenilworth, N.J. 07033

TABLE 6.2 MANUFACTURER'S CODE-TO-NAME INDEX (CONT)

CODE	NAME	ADDRESS
29587	Bunker Ramo Corp. Amphenol Industrial Div.	1830 So. 54th Ave. Chicago, Ill. 60650
31433	Union Carbide Corp. Materials Systems Div.	Hwy. 276 S.E., Greenville, S.C. 29606
31918	International Electro Exchange Inc.	8081 Wallace Rd., Eden Prairie, N.M. 55343
32159	West-Cap Arizona	2201 E. Elvira Rd., Tucson, AZ. 85706
32293	Intersil Inc.	10900 No. Tantau Ave. Cupertino, CA. 95014
32767	Griffith Plastic Corp.	1027 California Dr., Burlingame, CA. 94010
33095	Spectrum Control Inc.	152 E. Main St., Fairview, PA. 16415
34553	Amperex Electronic Corp. Component Div.	35 Hoffman Ave., Hauppauge, N.Y. 11787
44655	Ohmite Mfg. Co.	3601 W. Howard St., Skokie, Ill. 60076
46384	Penn Engineering & Mfg. Corp.	Old Easton Hwy, Doylestown, PA. 18901
50522	Monsanto Co. Electronic Special Products	10131 Bubb Rd., Cupertino, CA. 95014
51181	Keytronics Inc.	707 North St., Endicott, N.Y. 13760
51495	R&D Plastics	780 32nd St., Richmond, CA. 94804
52542	Systron-Donner Corp. Instrument Div.	10 Systron Dr., Concord, CA. 94518
52673	KSW Electronics Inc.	So. Bedford St., Burlingame, MA. 01803
53101	Garner Glass Co.	177 S. Indian Hill Blvd., Claremont, CA. 91711
54453	Sullins Electronic Corp.	P.O. Box 757, 275 Pico Ave. San Marcos, CA. 92069
56289	Sprague Electronic Co.	North Adams, MA. 01247
70485	Atlantic India Rubber Works Inc.	571 W. Polk St., Chicago, Ill. 60607
70903	Belden Corp.	415 So. Kilpatrick, Chicago, Ill. 60644

TABLE 6.2 MANUFACTURER'S CODE-TO-NAME INDEX (CONT)

CODE	NAME	ADDRESS
71279	Cambridge Thermonic Corp.	445 Concord Ave., Cambridge, MA. 01238
71286	Rexnard Inc. Specialty Fastener Div.	22 Spring Valley Rd., Paramus, N.J. 07652
71296	The Canfield Rubber Co.	Bridgeport, Conn.
71400	Bussmann Mfg. Div. of McGraw-Edison Co.	2536 W. University St. St. Louis, MO. 63017
71590	Globe-Union Inc. Centralab Electronics Div.	5757 No. Green Bay Ave. Milwaukee, WI. 53201
71707	Coto Coil Co. Inc.	65 Pavilion Ave., Providnece, R.I. 02905
71785	TRW Electronic Components Cinch Connector Operations	1501 Morse Ave. Elk Grove Village, Ill 60007
72136	Electro Motive Mfg. Co. Inc.	South Park & John Sts. Willimantic, CO. 06226
72259	Nytronics Inc.	10 Pelham Pky, Pelham Manor, N.Y. 10803
72619	Dialight Corp.	60 Stewart Ave., Brooklyn, N.Y. 11237
72982	Erie Technological Products Inc.	644 W. 12th St., Erie, PA. 16512
73138	Beckman Instruments Inc. Helipot Div.	2500 Harbor Blvd. Fullerton, CA. 92634
73508	Brawley Felt Co.	136 West St., Northampton, MA. 01060
73803	Texas Instruments Inc.	Metallurigical Materials Div. Attleboro, MA. 02703
73899	J F D Electronics Corp.	15th at 62nd St., Brooklyn, N.Y. 11219
73957	Groov-Pin Corp.	1125 Hendricks Causeway Ridgefield, N.J. 07657
74370	Birtcher Corp. Manning Instrument Div.	4371 Valley Blvd. Monterey Park, CA. 90032
74542	Hoyt Electrical Instrument Inc.	45 Washington St., Penacook, N.H. 03301
74970	E.F. Johnson Co.	299 10th Ave. S.W., Waseca, MN. 56093

TABLE 6.2 MANUFACTURER'S CODE-TO-NAME INDEX (CONT)

CODE	NAME	ADDRESS
75042	TRW Electronic Components Fixed Resistors Philadelphia Div.	401 N. Broad St. Philadelphia, PA. 19108
75915	Littlefuse Inc.	800 E. Northwest Hwy. Des Plaines, Ill. 60016
76381	Minnesota Mining and Mfg. Co.	3 M Center, St. Paul, MN. 55101
76854	Oak Industries Inc. Switch Div.	S. Main St. Crystal Lake, Ill. 60014
78189	Illinois Tool Works Inc. Shakeproof Div.	St. Charles Rd., Elgin Ill. 60120
78553	Tinnerman Products Inc.	8700 Brookpark Rd., Cleveland, Ohio 44129
79727	C-W Industries	P.O. Box 96, 550 Davisville Rd. Warminister, PA. 18974
79963	Zierick Mfg. Co.	Radio Circle, Mt. Kisco, N.Y. 10549
80294	Bourns Inc. Instrument Div.	6135 Magnolia Ave Riverside, CA. 92506
81073	Grayhill Inc.	561 Hillgrove Ave., La Grange, Ill. 60525
81349	MIL STD	
81483	International Rectifier Corp.	9220 Sunset Blvd., Los Angeles, CA. 90069
82389	Switchcraft Inc.	5555 N. Elston Ave., Chicago, Ill. 60630
83014	Hartwell Corp.	9035 Venice Blvd., Los Angeles, CA. 90034
83330	Smith, Herman H. Inc.	812 Snediker Ave., Brooklyn, N.Y. 11207
86445	Penn Fibre & Specialty Co.	2032 E. Westmoreland St. Philadelphia, PA. 19134
86928	Seastrom Mfg. Co. Inc.	701 Sonora Ave., Glendale, CA. 91201
88245	Litton Systems Inc.	13536 Saticoy St., Van Nuys, CA. 91409
89110	Amp. Inc.	P.O. Box 3608, Harrisburg, PA. 17105
89826	Radiation Internation Inc. Portland Heavy Industries Div.	P.O. Box 20296, 19000 N.E. Sandy Blvd. Portland, Oregon 97220

TABLE 6.2 MANUFACTURER'S CODE-TO-NAME INDEX (CONT)

CODE	NAME	ADDRESS
90201	Mallory Capacitor Co.	P.O. Box 372, 3029 E. Washington St. Indianapolis, IN. 46206
91418	Radio Materials Co.	4242 W. Bryn Mawr, Chicago, Ill. 60646
91506	Augat Inc.	33 Perry Ave., Attleboro, MA. 02703
91515	Arnolt Corp.	P.O. Box 540, Warsaw, IN. 46580
91537	Magazines For Industry Inc.	777 3rd Ave., New York, N.Y. 10017
91637	Dale Electronics Inc.	P.O. Box 609, Columbus, NE. 68601
91737	ITT Cannon/German	922 So. Lyon St., Santa Ana, CA. 92705
91836	Kings Electronics Co. Inc.	40 Marbledale Rd., Tuckahoe, N.Y. 10707
92194	Alpha Wire Corp.	Elizabeth, N.J.
92702	IMC Magnetics Corp. Eastern Div.	570 Main St., Westbury Long Island, N.Y. 11591
94222	Southco Inc.	Lester, PA. 19113
95263	Leecraft Mfg. Co. Inc.	21-16 44th Rd., Long Island City, N.Y. 11101
95348	Gordos Corp.	250 Glenwood Ave. Bloomfield, N.J. 07003
95987	Weckesser Co. Inc.	4444 W. Irving Park Rd. Chicago, Ill. 60641
96067	Microwave Associates West	999 E. Arques Ave., Sunnyvale, CA. 94086
96906	MIL STD	
96987	Benesh Tool and Mfg. Co.	1910 N. Telegraph, P.O. Box 906 Monroe, MI. 48161
98291	Sealectro Corp.	225 Hoyt, Mamaronick, N.Y. 10544
98921	O and M Mfg. Co.	8203 Market St. Rd., Houston, Tex. 77029
98978	International Electronic Research Corp.	135 W. Magnolia Ave., Burbank, CA. 91502

TABLE 6.2 MANUFACTURER'S CODE-TO-NAME INDEX (CONT)

CODE	NAME	ADDRESS
99392	S T M Corp.	2904 Chapman St., Oakland, CA. 94601
99800	American Precision Industries Inc. Delevan Div.	270 Quaker Rd. E. Aurora, N.Y. 14052

REPLACEABLE PARTS LIST

TITLE: SHIPPING ASSEMBLY #057500

ITEM	REF	COMPONENT DESCRIPTION	MFR'S CODE	MANUFACTURER'S PART NUMBER	SD STOCK NUMBER	T/O
1		ASSEMBLY, Shipping	52542	057500	057500	1
7		ASSEMBLY, Test	52542	057499	057499	1
9		COVER, Complete Bottom	52542	053606	053606	1
		COVER, Bottom	52542	053573	053573	1
		FEET, Set	21604	PP40012&40013	101059	4
		NUT, Speed #6-32	78553	C7494-632-4	102907	4
		SCREW, PHMS #6-32 x 1/2	96906	MS51957-30	10063208	4
10		COVER, Perforated Top	52542	05537906	05537906	1
11		COVER, Side	52542	03376406	03376406	2
12		HANDLE	52542	03357006	03357006	2
13		TRIM, Side 19.12" deep	52542	03356406	03356406	4
14		CASTING, End 3.5"	52542	033693	033693	4
15		TRIM, Full Rack Front	52542	033762	033762	2
16		NAMEPLATE	52542	037112	037112	1
17		TRIM, Front Panel Strip	52542	04177311	04177311	1
18		TRIM, Insert Strip	52542	055540	055540	1
19		SCREW, FHMS #2-56 x 1/4	96906	NAS662C2R4	10070004	3
20		NUT, Hex #2-56 x 3/16	96906	MS35649-224	100636	3
23		CORD, Line 8',3x18 NEC,IEC	70903	BR-1736	102407	1
24	P4	CONNECTOR, 50-pin	02660	57-30500	101157	1
26	P101,102	PLUG, Line Voltage (100)	52542	05566401	05566401	2
27	P101,102	PLUG, Line Voltage (115)	52542	05566402	05566402	2
28	P101,102	PLUG, Line Voltage (200)	52542	05566403	05566403	2
29	P101,102	PLUG, Line Voltage (215)	52542	05566404	05566404	2
30	P101,102	PLUG, Line Voltage (225)	52542	05566405	05566405	2
31	P101,102	PLUG, Line Voltage (230)	52542	05566406	05566406	2
32	P101,102	PLUG, Line Voltage (240)	52542	05566407	05566407	2
		CONNECTOR, Rtnglr 9-pos 9-pos Shell	27264	03-06-2092	102811	1
		CONNECTOR, Terminal Male 18-24 GA	27264	02-06-2103	10282202	2
		CONNECTOR, Terminal Male 24-30 GA	27264	02-06-2132	10282205	4
		KIT, Rack Mounting	52542	057588	057588	1
34		TRIM, Rack Mount End	52542	03995202	03995202	2
35		SUPPORT, Rear	52542	03995102	03995102	2
36		HANDLE, Black Alum 8-32	06540	11351-A-0832-2	100927	2
37		SCREW, FHMS 8-32 x 3/8	96906	MS24693-C48	10074306	4
38		SCREW, PHMS 8-32 x 5/8	96906	MS51957-46	10064210	4
39		WASHER, Int. Tooth #8	96906	MS35333-72	100687	4
41		EXTENDER, P.C. 28-56	52542	05598401	05598401	1
42		BOARD, Extender PC	52542	055984	055984	1
43		CONNECTOR, PC Edge 28-56	05574	2VK28D/1-2	102990	1

TITLE		SHIPPING ASSEMBLY #057500 (Cont'd)				
ITEM	REF	COMPONENT DESCRIPTION	MFR'S CODE	MANUFACTURER'S PART NUMBER	SD STOCK NUMBER	T/Q
45		EXTENDER, P.C. 22-44	52542	05752901	05752901	1
46		BOARD, Extender PC	52542	057529	057529	1
47		CONNECTOR, PC Edge 22-44	54453	ISM22DRKH-550	102806	1
		OPTION 05 SERIAL PROGRAMMING				
53	A14	JUMPERS, Frequency Control	52542	05392801	05392801	1
54	A19	JUMPERS, Remote	52542	05741502	05741502	1
55		OPTION 06 IEEE-488 PROGRAMMING DELETE:	52542	057664	057664	1
57	A19	REMOTE	52542	05741501	05741501	1
58		CABLE	52542	05749301	05749301	1
59	P4	PLUG, 50-pin	02660	57-30500	101157	1
		ADD:				
62	A19	IEEE-488(1)	52542	05743001	05743001	1
61	A13	IEEE-488(2)	52542	04739401	05739401	1
63		CABLE	52542	05748401	05748401	1
64		CONNECTOR, Mtg. Plate	52542	057411	057411	1
65		SPACER, M-F	52542	057361	057361	2
66		NUT, Hex 6-32	96906	NAS671C6	100638	2
67		WASHER, Split #6	96906	MS35338-135	100712	2

TITLE		TEST ASSEMBLY #057499				
ITEM	REF	COMPONENT DESCRIPTION	MFR'S CODE	MANUFACTURER'S PART NUMBER	SD STOCK NUMBER	T/Q
		TEST ASSEMBLY				
1		ASSEMBLY, Chassis	52542	057497	057497	1
2		ASSEMBLY, Rear Panel	52542	053578	053578	1
3		ASSEMBLY. L.H. Gusset	52542	053579	053579	1
4		ASSEMBLY, R.H. Gusset	52542	045785	045785	1
5		PANEL, Front Sub	52542	045764	045764	1
6		PANEL, Decorative	52542	053124	053124	1
7		SHIELD, P.C.	52542	057498	057498	1
8		SHILED, Card Cage	52542	04576001	04576001	10
9	Y1	OSCILLATOR, 3 MHz $3x10^{-9}$/Day	52542	033428	033428	1
10	T1	TRANSFORMER, Power	52542	055533	055533	1
11	T2	TRANSFORMER, Oscillator	52542	055534	055534	1
12	L101	CHOKE, Power 4 mH	52542	053581	053581	1
13		CLIP, Lamp for Cartrg,Lite	03797	Q-081-905	10241502	2
14	J101,102	CONNECTOR, Rtng, 9-pos	27264	03-06-1091	103161	2
15	S1,S2	SWITCH, SPDT W/Blk Flat Bat	09353	7101PN+Dress Nut	102346	2
16	DS1	LED, Cartrg Yellow 5V,35 mA	15513	91-BA5H-NA0	103354	1
17	DS2	LED, Cartrg Green 5V,35 mA	15513	91-BA5H-NG0	103353	1
18		WASHER, Rubber Mtg.	03797	Q-145-008	10241501	2
19	XDS1,2	SOCKET, Cartrg Lite	03797	Q-082-2K	102415	2
20		CABLE, Coax	52542	05509002	05509002	1
21	A1	ASSEMBLY, Frequency Thumb-wheel Switch PC	52542	05314603	05314603	1
22	A2	ASSEMBLY, VCO ÷N PC	52542	05310804	05310804	1
23	A3	ASSEMBLY, VCO ÷N PC	52542	05310801	05310801	1
24	A4	ASSEMBLY, VCO SUM PC	52542	05350201	05350201	1
25	A6,8,10	ASSEMBLY, VCO SUM PC	52542	05350202	05350202	3
26	A5,7,9	ASSEMBLY, VCO ÷N PC	52542	05310802	05310802	3
27	A11	ASSEMBLY, VCO ÷N PC	52542	05310805	05310805	1
28	A12	ASSEMBLY, 10 MHz Ref. PC	52542	05702301	05702301	1
29	A14	ASSEMBLY, Frequency Control	52542	05392803	05392803	1
30	A15	ASSEMBLY, Multiplier Com-puter Calculator	52542	05399201	05399201	1
31	A16	ASSEMBLY, D to A Converter	52542	05550201	05550201	1
32	A17	ASSEMBLY Multiplier Com-puter Logic PC	52542	05393101	05393101	1
33	A18	ASSEMBLY, Multiplier Com-puter D to A PC	52542	05392001	05392001	1
34	A19	ASSEMBLY, Remote (New)	52542	05741501	05741501	1
35	A20	ASSEMBLY, Lock Indicator PC	52542	05373301	05373301	1
36	A21	ASSEMBLY, 100 MHz Ref. PC	52542	05732701	05732701	1
37	A22	ASSEMBLY, IF Phase Det. PC	52542	055058	055058	1
38	A23	ASSEMBLY Output Sum Osc.	52542	055065	055065	1

TITLE TEST ASSEMBLY #057499 (Cont'd)

ITEM	REF	COMPONENT DESCRIPTION	MFR'S CODE	MANUFACTURER'S PART NUMBER	SD STOCK NUMBER	T/Q
39	A25	ASSEMBLY, OUTPUT ÷N OSC.	52542	055256	055256	1
40		SCREW, FHMS 2-56 x 5/16	96906	NAS662C2R5	10070005	4
41		NUT, Hex #2	96906	MS35649-224	100636	8
42		WASHER, Split Lock #2	96906	MS35337-77	100661	8
43		WASHER, Flat #2	96906	MS15795-80C	100614	4
44		SCREW, PHMS 6-32 x 5/16	96906	MS51957-27	10063205	9
45		WASHER, Split Lock #6	96906	MS35338-136	100712	21
46		WASHER, Flat #6	96906	MS15795-805	100704	8
47		SCREW, FHMS 6-32 x 1/4	96906	MS24693-C24	10073104	4
48		SCREW, FHMS	96906	MS24693-C47	10074305	12
60		SCREW, FHMS 8-32 x 3/8	96906	MS24693	10074306	4
61		SCREW, PHMS 8-32 x 7/16	96906	MS5197-44	10064207	4
62		WASHER, Split Lock #8	96906	MS35338-137	100713	7
63		SCREW, PHMS 8-32 x 1/4	96906	MS51957-41	10064204	4
64		LUG, Solder #8	78189	2104-08-00	102961	1
65		SCREW, PHMS 6-32 x 1/4	96906	MS51957-26	10063204	12
66		NUT, Kep #6	78189	511-061800-00	100862	2
67		SCREW, PHMS 6-32 x 1/2	96906	MS51957-30	10063208	2
68		CLAMP, Cable 5/16	95987	5/16-4NA	100717	2
69		CLAMP, Cable 1/2	95987	1/2-4	100765	2
70		CABLE, Card Cage #1	52542	05379801	05379801	1
71		CABLE Card Cage #29	52542	05700101	05700101	1
72		CABLE, Card Cage #39	52542	05700201	05700201	1
73		CABLE, Card Cage #49	52542	05700301	05700301	1
74		CABLE, Card Cage #5	52542	05380201	05380201	1
76		CABLE, IEEE-488	52542	05748501	05748501	1
77		CORE, Toroid Bead	02114	56-590-65/23-3B	100686	32
78		SCREW, PHMS 2-56 x 51/6	96906	MS51957-4	10062505	4
79		CABLE, Coax	52542	05733101	05733101	2
80		CABLE, Coax	52542	05733102	05733102	1
81		CABLE, Coax	52542	05733201	05732201	2
82		CABLE, Coax	52542	05733202	05732201	1
83		CABLE, Coax	52542	05733001	05733001	1

REPLACEABLE PARTS LIST

TITLE		CHASSIS ASSEMBLY #057497				
ITEM	REF	COMPONENT DESCRIPTION	MFR'S CODE	MANUFACTURER'S PART NUMBER	SD STOCK NUMBER	T/Q
		CHASSIS ASSEMBLY				
1		CHASSIS	52542	053212	053212	1
2		SUB-CHASSIS, Transformer	52542	053201	053201	1
3		CARD CAGE, #2 Left	52542	053122	053122	1
4		CARD CAGE, #2 Right	52542	053123	053123	1
5	XA1	CONNECTOR, PC Edge 10-20	05574	2VK10D/1-2	101253	1
6	XA2-XA12, XA15, XA17-XA21	CONNECTOR, PC Edge 22-44	05574	2VK22D/1-2	101168	17
7	XA13,14	CONNECTOR, PC Edge 28-56	05574	2VK28D/1-2	102990	2
8	XU105, XU106	KIT, Mounting TO-3	04713	MK-15	100689	2
9		CLAMP, Capacitor	56289	CM5-22	100725	4
10		BUSHING, Snap .5 Dia	28520	SB-500-6	100680	2
11		Bushing, Snap .75 Dia	28520	SB-750-9	100885	1
12		GROMMET, Cat	03296	G51A-B	100913	A/R
13	TP1	TERMINAL, Strip 4 Lug	71785	53F	100472	1
14		KEY, Polarizing	05574	091-0024-000	100808	18
15		TERMINAL, Ground	71279	2381-1	100488	2
16		SCREW, PHMS 4-40 x 3/16	96906	MS51957-12	10062603	6
17		SCREW, PHMS 4-40 x 3/8	96906	MS51957-15	10062606	6
18		SCREW, PHMS 4-40 x 1/2	96906	MS51957-17	10062608	40
19		SCREW, PHMS 6-32 x 1/4	96906	MS51957-26	10063204	28
20		SCREW, PHMS 6-32 x 3/8	96906	MS51957-28	10063206	5
21		SCREW, PHMS 6-32 x 1/2	96906	MS51957-30	10063208	4
22		GUIDE, Card	52542	02134011	02134011	38
23		SCREW, PHMS 6-32 x 1/4	96906	MS24693-C24	10073104	8
24		WASHER, Flat #4	96906	MS15795-803	100703	30
25		WASHER, Split Lock #4	96906	MS35338-135	100711	6
26		WASHER, Flat #6	96906	MS15795-805	100704	30
27		WASHER, Split Lock #6	96906	MS35338-136	100712	27
28		NUT, Hex #4	96906	MS35649-244	100707	24
29		NUT, Kep #4	78189	511-041800-00	100941	7
30		NUT, Hex #6	96906	MS35649-264	100706	3
31		NUT, Kep #6	78189	511-061800-00	100862	6
32		LUG, Solder #4	83330	1416-4	100509	43
33		LUG, Solder #6	83330	1413-6	100486	5
34	C101,102 103	CAPACITOR, El Can 4600 µF, 15V	52542	36D462G015AA6B	100230	2
35		BRACKET, Connector	52542	055057	055057	2
36		SPACER, #4	06540	8212-A	103177	13
37	C104	CAPACITOR, El Can 6750 µF, 15V	99392	91M15HA822L	102975	1

REPLACEABLE PARTS LIST

TITLE: CHASSIS ASSEMBLY #057497 (Cont'd)

ITEM	REF	COMPONENT DESCRIPTION	MFR'S CODE	MANUFACTURER'S PART NUMBER	SD STOCK NUMBER	T/Q
38	R101	RESISTOR, CC 820 Ω 5%, 1/4W	01121	CB8215	101567	1
39		LUG, Solder #8	78189	2104-08-00	102961	8
40	U101	INTEGRATED CIRCUIT Voltage Regulator 15V, 5%	07263	7815KC	045282	1
41	U106	INTEGRATED CIRCUIT Voltage Regulator 15V	27014	LM320K-15	045293	1
42		INSULATOR	08289	DM-103	102940	2
43		SCREW, PHMS 4-40 x 1/4	96906	MS51957-13	10062604	4
44	C117-122	CAPACITOR, Ceramic 1 µF 20%, 50V	56289	5CZ5U105X0050C5	100176	6
45	C123,124	CAPACITOR, 100 µF 20%, 10V	56289	150D107X9010R2	100119	2
46	C113-116	CAPACITOR, Tant 6.8 µF 10%, 35V	56289	150D685X9035B	100182	4
47	XA16	CONNECTOR, PC Edge 22-pos	05574	2VK225/1-2	102637	1
49		CARD CAGE, Left	52542	045147	045147	1
50		CARD CAGE, Right	52542	045746	045746	1

REPLACEABLE PARTS LIST

TITLE		LEFT GUSSET ASSEMBLY #053579				
ITEM	REF	COMPONENT DESCRIPTION	MFR'S CODE	MANUFACTURER'S PART NUMBER	SD STOCK NUMBER	T/Q
		LEFT GUSSET ASSEMBLY				
1		GUSSET, Left	52542	045786	045786	1
2		HEATSINK, Regulator	52542	053213	053213	1
3	A24	ASSEMBLY, Power Supply PC	52542	05595601	05595601	1
4	CR13	RECTIFIER, Assy 50V, 4A	04713	MDA970-1	102976	1
5	U1	INTEGRATED CIRCUIT Voltage Regulator +24V	07263	7824UC	045246	1
6	U2	INTEGRATED CIRCUIT Voltage Regulator +18V	07263	7818UC	045294	1
7		SCREW, FHMS 4-40 x 5/8	96906	MS24693-C7	10072010	3
8		SCREW, FHMS 4-40 x 3/4	96906	MS24693-C8	10072010	1
9		SCREW, FHMS 6-32 x 5/16	96906	MS24693-C25	10073105	7
10		WASHER, Flat #4	96906	MS15795-803	100703	4
11		NUT, Kep #4	78189	511-041800-00	100941	4
12		INTEGRATED CIRCUIT Voltage Regulator, 8V,1.5A	07263	7808UC	045265	1

REPLACEABLE PARTS LIST

TITLE	REAR PANEL ASSEMBLY #053578					
ITEM	REF	COMPONENT DESCRIPTION	MFR'S CODE	MANUFACTURER'S PART NUMBER	SD STOCK NUMBER	T/Q
		REAR PANEL				
1		PANEL, Rear	52542	053187	053187	1
2		HEATSINK	52542	053358	053358	2
4	FL1	FILTER, RFI, 3A, 250V	05245	3EF1	102461	1
5	J2	CONNECTOR, AC Recpt	29587	160-2-N	102983	1
10	J7,J9	CONNECTOR RF BNC	96906	UG-1094A/U	101170	2
13	XF1,2	POST, Fuse	75915	342004	102409	2
14	XU101-XU104	SOCKET, TO3	06776	MD-3452-G	830099	4
15	U101-U104	INTEGRATED CIRCUIT Regulator, 5V, 1A	27014	LM309K	025787	4
16		PLUG, Button	83330	652	100840	1
17	C105-C112	CAPACITOR, Tant 6.8 F 10%, 35V	56289	150D685X9035B	100182	8
19		LUG, Solder BNC	83330	1497	100495	2
21		LUG, Solder #6	83330	1413-6	100486	1
23		SCREW, PHMS #4-40 x 7/16	96906	MS51957-16	10062607	6
24		BUSHING, Nylon	04713	51547F002	103120	16
25		SCREW, PHMS 6-32 x 5/16	96906	MS51957-27	10063205	8
26		SCREW, PHMS 6-32 x 7/16	96906	MS51957-29	10063207	2
28		WASHER, Flat #4	96906	MS15795-803	100703	6
29		WASHER, Split Lock #6	96906	MS35338-136	100712	16
30		WASHER, Flat #6	96906	MS15795-805	100704	2
31		WASHER, Int Tooth #6	96906	MS35333-71	100647	1
32		PLATE, Switch IEEE-488	52542	057417	057417	1
34		NUT, Kep #4	78189	511-041800-00	100941	2
35		NUT, Hex #6	96906	MS35649-264	100706	2
36		INSULATOR	08289	DM-103	102940	4
37		SCREW, PHMS 6-32 x 5/8	96906	MS51957-31	10063210	8
38		WASHER, Split Lock #4	96906	MS35338-135	100711	4

REPLACEABLE PARTS LIST

TITLE: A1, SWITCH ASSEMBLY
OPT 09,A1 #05314603; OPT 02,A1 #05314602; A1, #05314601

ITEM	REF	COMPONENT DESCRIPTION	MFR'S CODE	MANUFACTURER'S PART NUMBER	SD STOCK NUMBER	T/O
1		ASSEMBLY, Thumbwheel Switch PC	52542	05313201	05313201	1
2		ASSEMBLY, Thumbwheel 9-digit Switch	52542	05598903	05598903	1
		THUMBWHEEL SWITCH ASSEMBLY	52542	05313201	05313201	REF
		PC BAORD	52542	053132	053132	3
	CR1 thru C40	DIODE, Signal 50V	03508	1N4151	100385	40
		THUMBWHEEL 9-DIGIT SWITCH ASSEMBLY	52542	05598903	05598903	REF
		STRAP, Switch Mtg. Pair	07126	29-57-001-11	10236711	1
		BRACKET, Switch End Mt.Blk	07126	102359	102359	1
		SWITCH, Thumbwheel 0-1 PC pins, 1 comm,dec pt	07126	29116/BP	103781	1
		SWITCH, Thumbwheel BCD PC pin, 1 Comm,Dec Pt	07126	29118/BP	103780	1
		SWITCH, Thumbwheel BCD PC pins, 1 Comm,Blk Matt	07126	29118/BP	102997	7
		SPACER, Switch .35 in.	07126	29-10004/B	102358	2
		OPTION 02,A1 ASSEMBLY #05314902				
		This 11-digit Assembly is exactly the same as the 9-digit Assembly with the following changes:				
		SWITCH, Thumbwheel BCD PC pins,.1 Comm,Blk Matt	07126	29118/BP	102997	9
		SPACER, Switch .35 in.	07126	29-10004/B	102358	0
		A1, ASSEMBLY #05314601				
		This 8-digit Assembly is exactly the same as the 9-digit Assembly with the following changes:				
		SWITCH, Thumbwheel BCD PC pins, 1 Comm,Blk Matt	07126	29118/BP	102997	6
		SPACER, Switch .35 in	07126	29-10004/B	102358	3

REPLACEABLE PARTS LIST

OPTION 02 & 09 A2, A5 VCO ÷N 10-19.9 MHz PC ASSEMBLY #05310804

ITEM	REF	COMPONENT DESCRIPTION	MFR'S CODE	MANUFACTURER'S PART NUMBER	SD STOCK NUMBER	T/O
		PC BOARD	52542	053108	053108	1
	C1	CAPACITOR, Ceramic 2000 pF 10%, 500V	71590	CE-202	100060	2
	C2	Same as C1				
	C3	CAPACITOR, Ceramic .1 µF 20%, 50V	56289	5C023104X0500C5	100178	2
	C4	CAPACITOR, Mica 330 pF 5%, 500V	72136	DM15FD331JO	10027601	1
	C5	CAPACITOR, Ceramic .01 µF +80-20%, 100V	91418	TA110	100103	15
	C6	Same as C3				
	C7	CAPACITOR, Mica 200 pF 5%, 500V	72136	DM15FD201JO	102676	1
	C8	Not Used				
	C9	Not Used				
	C10	CAPACITOR, Ceramic 1 µF 20%, 50V	56289	5CZ5U105X0050C5	100176	3
	C11	Same as C5				
	C12	Same as C5				
	C13	Same as C5				
	C14	CAPACITOR, Tant 39 µF 10%, 20V	56289	150D396X9020R2	102561	2
	C15	Same as C10				
	C16	CAPACITOR, Mica 82 pF 5%, 500V	72136	DM15ED820JO	10017201	2
	C17	CAPACITOR, Mica 68 pF 5%, 500V	72136	DM15ED680JO	10023901	1
	C18	Same as C16				
	C19	Same as C5				
	C20	CAPACITOR, Ceramic .1 µF +80-20%, 10V	71590	UK10-104	100120	1
	C21	Same as C5				
	C22	Same as C5				
	C23	Same as C10				

OPTION 02 & 09 A2, A5 VCO ÷N 10-19.9 MHz PC ASSEMBLY #05310804 (Cont'd)

ITEM	REF	COMPONENT DESCRIPTION	MFR'S CODE	MANUFACTURER'S PART NUMBER	SD STOCK NUMBER	T/Q
	C24	Same as C5				
	C25	Same as C5				
	C26	Same as C5				
	C27	Not Used				
	C28	Same as C5				
	C29	Same as C5				
	C30	Same as C5				
	C31	Same as C5				
	C32	Same as C5				
	C33	Same as C5				
	C34	Same as C14				
	CR1	DIODE, Variable Capacitor 125 pF 3V	52542	053437	053437	2
	CR2	Same as CR1				
	L1	INDUCTOR, Fixed 1000 µH 5%	72259	WEE-1000	101303	2
	L2	Same as L1				
	L3	INDUCTOR, Fixed 470 µH 5%	72259	WEE-470	101297	3
	L4	Same as L3				
	L5	INDUCTOR, Variable	52542	05514302	05514302	1
	L6	INDUCTOR, Fixed 1 µH 10%	99800	1537-12	101312	1
	L7	INDUCTOR, Fixed 100 µH 5%	72259	WEE-100	101306	1
	L8	Same as L3				
	Q1	TRANSISTOR, MOSFET N-Channel Dual Gate	04713	MFE121	101413	1
	Q2	TRANSISTOR, SINPN	02735	2N5179	101388	1
	Q3	TRANSISTOR, SINPN 15V	07293	PN4275-18	102716	2
	Q4	Same as Q3				
	R1	RESISTOR, CC 1.2 k 5%, 1/4W	01121	CB1225	101581	6

OPTION 02 & 09 A2, A5 VCO ÷N 10-19.9 MHz PC ASSEMBLY #05310804 (Cont'd)

ITEM	REF	COMPONENT DESCRIPTION	MFR'S CODE	MANUFACTURER'S PART NUMBER	SD STOCK NUMBER	T/O
	R2	Same as R1				
	R3	Same as R1				
	R4	Same as R1				
	R5	RESISTOR, CC 270 Ω 5%, 1/4W	01121	CB2715	101542	3
	R6	Same as R5				
	R7	RESISTOR, CC 10 Ω 5%, 1/4W	01121	CB1005	101557	2
	R8	RESISTOR, CC 1 k 5%, 1/4W	01121	CB1025	101569	2
	R9	Same as R8				
	R10	RESISTOR, CC 10 k 5%, 1/4W	01121	CB1035	101570	2
	R11	RESISTOR, CC 330 Ω 5%, 1/4W	01121	CB3315	101536	1
	R12	RESISTOR, CC 100 k 5%, 1/4W	01121	CB1045	101558	1
	R13	RESISTOR, CC 68 k 5%, 1/8W	01121	BB6835	101822	1
	R14	RESISTOR, CC 47 k 5%, 1/4W	01121	CB4735	101574	1
	R15	RESISTOR, CC 620 Ω 5%, 1/4W	01121	CB6215	101688	1
	R16	RESISTOR, CC 220 Ω 5%, 1/4W	01121	CB2215	101566	4
	R17	Same as R1				
	R18	Same as R1				
	R19	Same as R5				
	R20	RESISTOR, CC 47 Ω 5%, 1/4W	01121	CB4705	101560	1
	R21	Same as R7				
	R22	Same as R16				
	R23	Same as R16				
	R24	RESISTOR, CC 3.3 k 5%, 1/4W	01121	CB3325	101559	2

OPTION 02 & 09 A2, A5 VCO ÷N 10-19.9 MHz PC ASSEMBLY #05310804 (Cont'd)

ITEM	REF	COMPONENT DESCRIPTION	MFR'S CODE	MANUFACTURER'S PART NUMBER	SD STOCK NUMBER	T/Q
	R25	Same as R24				
	R26	Same as R16				
	R27	RESISTOR, CC 120 Ω 5%, 1/4W	01121	CB1215	101717	1
	R28	Same as R10				
	R29	RESISTOR, CC 1.8 k 5%, 1/4W	01121	CB1825	101602	1
	R30	RESISTOR, CC 470 Ω 5%, 1/4W	01121	CB4715	101625	1
	TP1	TEST POINT, White	91506	8041-1G9	100529	1
	U1	INTEGRATED CIRCUIT, TTL MSI Quad Latch	01295	SN74LS75N	103133	2
	U2	INTEGRATED CIRCUIT, TTL MSI Programmable 1/N Dec Cntr	04713	MC4016P	045237	3
	U3	INTEGRATED CIRCUIT, TTL MSI Counter Control Logic	04713	MC12014L	045263	1
	U4	Same as U2				
	U5	Same as U1				
	U6	INTEGRATED CIRCUIT, TTL MSI Phase-Frequency Detector	04713	MC4044P	045238	1
	U7	Same as U2				
	U8	Not Used				
	U9	INTEGRATED CIRCUIT Operational Amplifier	02735	CA3130T	103231	1
		JUMPER, Molded	GETTIG	L-2007-1	102879	1
		JUMPER, Insulated #24WG				

REPLACEABLE PARTS LIST

TITLE	OPTION 02,09 A3 VCO ÷N PC ASSEMBLY #05310801					
ITEM	REF	COMPONENT DESCRIPTION	MFR'S CODE	MANUFACTURER'S PART NUMBER	SD STOCK NUMBER	T/O
		PC BOARD	52542	053108	053108	1
	C1	CAPACITOR, Ceramic .1 µF 10%, 500V	71590	CE-202	100060	2
	C2	Same as C1				
	C3	CAPACITOR, Ceramic .1 µF 20%, 50V	56289	5C023104X0500C5	100178	2
	C4	CAPACITOR, Mica 330 pF 5%, 500V	72136	DM15FD331JO	10027601	1
	C5	CAPACITOR, Ceramic .01 µF +80-20%, 100V	91418	TA110	100103	15
	C6	Same as C3				
	C7	CAPACITOR, Mica 200 pF 5%, 500V	72136	DM15FD201JO	102576	1
	C8	Not Used				
	C9	Not Used				
	C10	CAPACITOR, Ceramic 1 µF 20%, 50V	56289	5CZ5U105X0050C5	100176	3
	C11	CAPACITOR, Selected in Test				
	C12	Same as C5				
	C13	Same as C5				
	C14	CAPACITOR, Tant 39 µF 10%, 20V	56289	150D396X9020R2	102561	2
	C15	Same as C10				
	C16	CAPACITOR, Mica 82 pF 5%, 500V	72136	DM15ED820JO	10017201	2
	C17	CAPACITOR, Mica 68 pF 5%, 500V	72136	DM15ED680JO	10023901	1
	C18	Same as C16				
	C19	Same as C5				
	C20	CAPACITOR, Ceramic .1 µF +80-20%, 10V	71590	UK10-104	100120	1
	C21	Same as C5				
	C22	Same as C5				
	C23	Same as C10				
	C24	Same as C5				

TITLE: OPTION 02,09 A3 VCO ÷N PC ASSEMBLY #05310801 (Cont'd)

ITEM	REF	COMPONENT DESCRIPTION	MFR'S CODE	MANUFACTURER'S PART NUMBER	SD STOCK NUMBER	T/Q
	C25	Same as C5				
	C26	Same as C5				
	C27	CAPACITOR, Mica 47 pF 5%, 500V	72136	DM15ED470JO	10017101	1
	C28	Same as C5				
	C29	Same as C5				
	C30	Same as C5				
	C31	Same as C5				
	C32	Same as C5				
	C33	Same as C5				
	C34	Same as C14				
	CR1	DIODE, Variable Capacitor 125 pF, 3V	52542	053437	053437	2
	CR2	Same as CR1				
	L1	INDUCTOR, Fixed 1000 µH 5%	72259	WEE-1000	101303	2
	L2	Same as L1				
	L3	INDUCTOR, Fixed 470 µH 5%	72259	WEE-470	101297	3
	L4	Same as L3				
	L5	INDUCTOR, Variable	52542	05514302	05514302	1
	L6	INDUCTOR, Fixed 1 µH 10%	99800	1537-12	101312	1
	L7	INDUCTOR, Fixed 100 µH 5%	72259	WEE-100	101306	1
	L8	Same as L3				
	Q1	TRANSISTOR, MOSFET N-Channel, Dual Gate	04713	MFE121	101413	1
	Q2	TRANSISTOR, SINPN	02735	2N5179	101388	1
	Q3	TRANSISTOR, SINPN	07293	PN4275-18	102716	2
	Q4	Same as Q3				
	R1	RESISTOR, CC 1.2 k 5%, 1/4W	01121	CB1225	101581	6
	R2	Same as R1				

TITLE	OPTION 02,09 A3 VCO ÷N PC ASSEMBLY #05310801 (Cont'd)				
ITEM	REF	COMPONENT DESCRIPTION	MFR'S CODE	MANUFACTURER'S PART NUMBER	SD STOCK NUMBER	T/Q
	R3	Same as R1				
	R4	Same as R1				
	R5	RESISTOR, CC 270 Ω 5%, 1/4W	01121	CB2715	101542	3
	R6	Same as R5				
	R7	RESISTOR, CC 10 Ω 5%, 1/4W	01121	CB1005	101557	2
	R8	RESISTOR, CC 1 k 5%, 1/4W	01121	CB1025	101569	2
	R9	Same as R8				
	R10	RESISTOR, CC 10 k 5%, 1/4W	01121	CB1035	101570	2
	R11	RESISTOR, CC 330 Ω 5%, 1/4W	01121	CB3315	101536	1
	R12	RESISTOR, CC 100 k 5%, 1/4W	01121	CB1045	101558	1
	R13	RESISTOR, CC 68 k 5%, 1/8W	01121	BB6835	101822	1
	R14	RESISTOR, CC 47 k 5%, 1/4W	01121	CB4735	101574	1
	R15	RESISTOR, CC 620 Ω 5%, 1/4W	01121	CB6215	101688	1
	R16	RESISTOR, CC 220 Ω 5%, 1/4W	01121	CB2215	101566	4
	R17	Same as R1				
	R18	Same as R1				
	R19	Same as R5				
	R20	RESISTOR, CC 47 Ω 5%, 1/4W	01121	CB4705	101560	1
	R21	Same as R7				
	R22	Same as R16				
	R23	Same as R16				
	R24	RESISTOR, CC 3.3 k 5%, 1/4W	01121	CB3325	101559	2
	R25	Same as R24				
	R26	Same as R16				

TITLE: OPTION 02,09 A3 VCO ÷N PC ASSEMBLY #05310801 (Cont'd)

ITEM	REF	COMPONENT DESCRIPTION	MFR'S CODE	MANUFACTURER'S PART NUMBER	SD STOCK NUMBER	T/Q
	R27	RESISTOR, CC 120 Ω 5%, 1/4W	01121	CB1215	101717	1
	R28	Same as R10				
	R29	RESISTOR, CC 1.8 k 5%, 1/4W	01121	CB1825	101602	1
	R30	RESISTOR, CC 470 Ω 5%, 1/4W	01121	CB4715	101625	1
	TP1	TEST POINT, White	91506	8041-1G9	100529	1
	U1	INTEGRATED CIRCUIT, TTL MSI Quad Latch	01295	SN74LS75N	103133	2
	U2	INTEGRATED CIRCUIT, TTL MSI Programmable 1/N Dec Cntr	04713	MC4016P	045237	3
	U3	INTEGRATED CIRCUIT, TTL MSI Counter Control Logic	04713	MC12014L	045263	1
	U4	Same as U2				
	U5	Same as U1				
	U6	INTEGRATED CIRCUIT, TTL MSI Phase-Frequency Detector	04713	MC4044P	045238	1
	U7	Same as U2				
	U8	INTEGRATED CIRCUIT, TTL SSI Quad 2-Input NOR Gates	04713	MC3002P	025739	1
	U9	INTEGRATED CIRCUIT Operational Amplifier	02735	CA3130T	103231	1
		JUMPER, Molded	GETTIG	L-2007-1	102879	2
		JUMPER, #24 AWG Insulated				

REPLACEABLE PARTS LIST

TITLE: OPTION 02,09 A4 VCO SUM PC ASSEMBLY #05350201

ITEM	REF	COMPONENT DESCRIPTION	MFR'S CODE	MANUFACTURER'S PART NUMBER	SD STOCK NUMBER	T/Q
		PC BOARD	52542	053502	053502	1
	C1	CAPACITOR, Ceramic 1000 pF 20%, 50V	71590	CW15C102M	100251	12
	C2	Same as C1				
	C3	CAPACITOR, Mica 33 pF 5%, 500V	72136	DM15ED330JO	10017501	1
	C4	CAPACITOR, Ceramic 1 µF 20%, 50V	56289	5CZ5U105X0050C5	100176	9
	C5	Same as C4				
	C6	Same as C1				
	C7	Same as C1				
	C8	Same as C1				
	C9	Same as C1				
	C10	CAPACITOR, Ceramic .1 µF 20%, 50V	56289	5C023104X0500C5	100178	5
	C11	CAPACITOR, Mica 330 pF 5%, 500V	72136	DM15FD331JO	10027601	2
	C12	CAPACITOR, Mica 470 pF 5%, 300V	72136	DM15FC471JO	10022101	1
	C13	Same as C11				
	C14	Same as C4				
	C15	Same as C10				
	C16	Same as C4				
	C17	Same as C4				
	C18	CAPACITOR, Ceramic .01 µF +80-20%, 100V	91418	TA110	100103	4
	C19	Same as C4				
	C20	Same as C1				
	C21	Same as C10				
	C22	Not Used				
	C23	Same as C10				
	C24	Same as C4				
	C25	Same as C18				
	C26	Same as C1				

TITLE	OPTION 02,09 A4 VCO SUM PC ASSEMBLY #05350201 (Cont'd)				
ITEM	REF	COMPONENT DESCRIPTION	MFR'S CODE	MANUFACTURER'S PART NUMBER	SD STOCK NUMBER	T/Q
	C27	CAPACITOR, Selected in Test				
	C28	CAPACITOR, Mica 82 pF 5%, 500V	72136	DM15ED820JO	10017201	2
	C29	CAPACITOR, Mica 47 pF 5%, 500V	72136	DM15ED470JO	10017101	1
	C30	Same as C28				
	C31	Same as C1				
	C32	Same as C4				
	C33	Same as C1				
	C34	Same as C10				
	C35	Same as C18				
	C36	Same as C18				
	C37	CAPACITOR, Mica 56 pF 5%, 500V	72136	DM15ED560JO	10017901	2
	C38	Same as C37				
	C39	CAPACITOR, Ceramic .033 µF 20%, 25V	71590	UK25-333	100333	1
	C40	Same as C1				
	C41	Same as C1				
	CR1	DIODE, Signal 20V	03508	1N4829	100443	2
	CR2	DIODE, Variable Capacitor 125 pF 3V	52542	053437	053437	2
	CR3	Same as CR2				
	CR4	DIODE, Signal 50V	03508	1N4151	100385	4
	CR5	Same as CR4				
	CR6	Same as CR4				
	CR7	Same as CR4				
	CR8	Same as CR1				
	L1	INDUCTOR, Fixed 1000 µH 5%	72259	WEE-1000	101303	2
	L2	INDUCTOR, Fixed 15 µH 10%	72259	WEE-15	102670	2
	L3	Same as L2				

TITLE	OPTION 02,09 A4 VCO SUM PC ASSEMBLY #05350201 (Cont'd)				
ITEM	REF	COMPONENT DESCRIPTION	MFR'S CODE	MANUFACTURER'S PART NUMBER	SD STOCK NUMBER	T/Q
	L4	INDUCTOR, Fixed 100 µH 5%	72259	WEE-100	101306	1
	L5	Same as L4				
	L6	Not Used				
	L7	Same as L1				
	L8	INDUCTOR, Variable	52542	05514303	05514303	1
	L9	INDUCTOR, Fixed 1 µH 10%	99800	1537-12	101312	1
	Q1	TRANSISTOR, SINPN	02793	PN4275-18	102716	3
	Q2	Same as Q1				
	Q3	Same as Q1				
	Q4	Not Used				
	Q5	Not Used				
	Q6	TRANSISTOR, MOSFET N-Channel, Dual Gate	04713	MFE121	101413	1
	Q7	TRANSISTOR, SINPN	04713	MPS6521	101430	1
	R1	RESISTOR, CC 220 Ω 5%, 1/4W	01121	CB2215	101566	3
	R2	RESISTOR, CC 1.5 k 5%, 1/4W	01121	CB1525	101577	3
	R3	RESISTOR, Selected in Test				
	R4	Not Used				
	R5	RESISTOR, CC 390 Ω 5%, 1/4W	01121	CB3915	101592	1
	R6	RESISTOR, CC 560 Ω 5%, 1/4W	01121	CB5615	101583	1
	R7	RESISTOR, CC 10 Ω 5%, 1/4W	01121	CB1005	101557	1
	R8	RESISTOR, CC 2.2 k 5%, 1/4W	01121	CB2225	101562	4
	R9	RESISTOR, CC 470 Ω 5%, 1/4W	01121	CB4715	101625	2
	R10	RESISTOR, CC 22 Ω 5%, 1/4W	01121	CB2205	101696	1
	R11	RESISTOR, CC 18 k 5%, 1/4W	01121	CB1835	101579	1

TITLE	OPTION 02,09 A4 VCO SUM PC ASSEMBLY #05350201 (Cont'd)				
ITEM	REF	COMPONENT DESCRIPTION	MFR'S CODE	MANUFACTURER'S PART NUMBER	SD STOCK NUMBER	T/Q
	R12	RESISTOR, CC 3.3 k 5%, 1/4W	01121	CB3325	101559	1
	R13	Same as R2				
	R14	RESISTOR, CC 3.9 k 5%, 1/4W	01121	CB3925	101601	1
	R15	RESISTOR, CC 56 Ω 5%, 1/4W	01121	CB5605	101735	1
	R16	RESISTOR, CC 10 k 5%, 1/4W	01121	CB1035	101570	4
	R17	Same as R9				
	R18	RESISTOR, CC 1 k 5%, 1/4W	01121	CB1025	101569	5
	R19	Same as R18				
	R20	RESISTOR, CC 4.7 k 5%, 1/4W	01121	CB4725	101598	2
	R21	Same as R16				
	R22	Same as R20				
	R23	RESISTOR, CC 270 Ω 5%, 1/4W	01121	CB2715	101542	2
	R24	Same as R23				
	R25	RESISTOR, CC 330 Ω 5%, 1/4W	01121	CB3315	101536	1
	R26	RESISTOR, CC 100 k 5%, 1/4W	01121	CB1045	101558	1
	R27	RESISTOR, CC 68 k 5%, 1/8W	01121	BB6835	101822	1
	R28	RESISTOR, CC 47 k 5%, 1/4W	01121	CB4735	101574	1
	R29	RESISTOR, CC 620 Ω 5%, 1/4W	01121	CB6215	101688	1
	R30	Same as R1				
	R31	Same as R18				
	R32	RESISTOR, CC 15 k 5%, 1/4W	01121	CB1535	101552	1
	R33	Not Used				

TITLE: OPTION 02,09 A4 VCO SUM PC ASSEMBLY #05350201 (Cont'd)

ITEM	REF	COMPONENT DESCRIPTION	MFR'S CODE	MANUFACTURER'S PART NUMBER	SD STOCK NUMBER	T/Q
	R34	RESISTOR, CC 1 M 5%, 1/4W	01121	CB1055	101605	1
	R35	Same as R8				
	R36	Same as R8				
	R37	Same as R8				
	R38	Same as R2				
	R39	Same as R16				
	R40	Same as R16				
	R41	Same as R18				
	R42	Same as R1				
	R43	Same as R18				
	TP1	TEST POINT, White	91506	8041-1G9	100529	1
	U1	INTEGRATED CIRCUIT, TTL MSI Pst Dec Cntr/Latch	01295	SN74196N	025784	2
	U2	Same as U1				
	U3	INTEGRATED CIRCUIT, TTL MSI Phase-Frequency Detector	04713	MC4044P	045238	1
	U4	INTEGRATED CIRCUIT, LIN MSC 100 MHz, Bal Mixer	01295	SN76514L	045235	1
	U5	INTEGRATED CIRCUIT, LIN MSC Wide Range Timer	18324	NE555V	045208	1
	U6	INTEGRATED CIRCUIT Operational Amplifier	02735	CA3130T	103231	2
	U7	Same as U6				
		WIRE, 24 ga Buss				

TITLE		OPTION 02,09 A5; A7,A9 VCO ÷N PC ASSEMBLY #05310802				
ITEM	REF	COMPONENT DESCRIPTION	MFR'S CODE	MANUFACTURER'S PART NUMBER	SD STOCK NUMBER	T/Q
		This Parts List is the same as the Parts List for the Option 02,09 A3 VCO ÷N PC Assembly #05310801 with the following exceptions:				
	U1	INTEGRATED CIRCUIT, TTL MSI Quad Latch	01295	SN74LS75N	103133	2
	U2	INTEGRATED CIRCUIT, TTL MSI Programmable 1/N Dec Counter	04713	MC4016P	045237	3
	U4	Same as U2				
	U5	Same as U1				

REPLACEABLE PARTS LIST

TITLE	OPTION 02,09 A6; A8,A10 VCO SUM PC ASSEMBLY #05350202				
ITEM	REF	COMPONENT DESCRIPTION	MFR'S CODE	MANUFACTURER'S PART NUMBER	SD STOCK NUMBER	T/Q
		This Parts List is the same as the Parts List for the Option 02,09 A5 VCO SUM PC Assembly #05350201 with the following exceptions:				
	U1	INTEGRATED CIRCUIT, TTL MSI Quad Latch	01295	SN74196N	025784	1
	U2	Not Used				

REPLACEABLE PARTS LIST

TITLE	A11, ÷N PC ASSEMBLY #05310805				
ITEM	REF	COMPONENT DESCRIPTION	MFR'S CODE	MANUFACTURER'S PART NUMBER	SD STOCK NUMBER	T/Q
		PC BOARD	52542	053108	053108	1
	C1	Not Used				
	C2	Not Used				
	C3	CAPACITOR, Ceramic 1 µF 20%, 50V	56289	5CZ5U105X0050C5	100176	2
	C4	CAPACITOR, Mica 150 pF 5%, 500V	72136	DM15FD151JO	10021901	1
	C5	CAPACITOR, Ceramic .01 µF +80-20%, 100V	91418	TA110	100103	11
	C6	CAPACITOR, Ceramic .1 µF 20%, 50V	56289	5C023104X0500C5	100178	1
	C7	CAPACITOR, Mica 200 pF 5%, 500V	72136	DM15FD201JO	102576	
	C8 thru C21	Not Used				
	C22	Same as C5				
	C23	Same as C3				
	C24	Same as C5				
	C25	Same as C5				
	C26	Same as C5				
	C27	Not Used				
	C28	Same as C5				
	C29	Same as C5				
	C30	Same as C5				
	C31	Same as C5				
	C32	Same as C5				
	C33	Same as C5				
	C34	CAPACITOR, Tant 39 µF 10%, 20V	56289	150D396X9020R2	102561	1
	L1	INDUCTOR, Fixed 1000 µH 5%	72259	WEE-1000	101303	2
	L2	Same as L1				
	L3 thru L6	Not Used				

TITLE A11, ÷N PC ASSEMBLY #05310805 (Cont'd)

ITEM	REF	COMPONENT DESCRIPTION	MFR'S CODE	MANUFACTURER'S PART NUMBER	SD STOCK NUMBER	T/O
	L7	INDUCTOR, Fixed 100 µH 5%	72259	WEE-100	101306	1
	L8	INDUCTOR, Fixed 470 µH 5%	72259	WEE-470	101297	1
	Q1	TRANSISTOR, SINPN	04713	2N3904	101377	1
	Q2	TRANSISTOR, SIPNP	04713	2N3906	101378	1
	Q3	TRANSISTOR, SINPN	07293	PN4275-18	102716	2
	Q4	Same as Q3				
	R1	RESISTOR, CC 1.2 k 5%, 1/4W	01121	CB1225	101581	4
	R2	Same as R1				
	R3	Same as R1				
	R4	Same as R1				
	R5	RESISTOR, CC 270 Ω 5%, 1/4W	01121	CB2715	101542	2
	R6	Same as R5				
	R7	Not Used				
	R8	RESISTOR, CC 100 Ω 5%, 1/4W	01121	CB1015	101609	2
	R9 thru R23	Not Used				
	R24	RESISTOR, CC 3.3 k 5%, 1/4W	01121	CB3325	101559	2
	R25	Same as R24				
	R26	RESISTOR, CC 220 Ω 5%, 1/4W	01121	CB2215	101566	1
	R27	RESISTOR, CC 120 Ω 5%, 1/4W	01121	CB1215	101717	1
	R28	RESISTOR, CC 10 k 5%, 1/4W	01121	CB1035	101570	1
	R29	RESISTOR, CC 1.8 k 5%, 1/4W	01121	CB1825	101602	1
	R30	RESISTOR, CC 470 Ω 5%, 1/4W	01121	CB4715	101625	1

REPLACEABLE PARTS LIST

TITLE	All, ÷N PC ASSEMBLY #05310805 (Cont'd)					
ITEM	REF	COMPONENT DESCRIPTION	MFR'S CODE	MANUFACTURER'S PART NUMBER	SD STOCK NUMBER	T/Q
	R31	RESISTOR, CC 56 Ω 5%, 1/4W	01121	CB5605	101735	1
	R32	Same as R8				
	U1	INTEGRATED CIRCUIT, TTL MSI Quad Latch	01295	SN74LS75N	103133	1
	U2	INTEGRATED CIRCUIT, TTL MSI Programmable 1/N Dec Counter	04713	MC4016P	045237	2
	U3	INTEGRATED CIRCUIT, TTL MSI Counter Control Logic	04713	MC12014L	045263	1
	U4	Not Used				
	U5	Not Used				
	U6	INTEGRATED CIRCUIT, TTL MSI Phase-Frequency Detector	04713	MC4044P	045238	1
	U7	Same as U2				
	U8	Not Used				
	U9	INTEGRATED CIRCUIT Operational Amplifier	02735	CA3130T	103231	1
		JUMPER, Molded	Gettig	L-2007-1	102879	2
		JUMPER, #24AWG Insulated				

REPLACEABLE PARTS LIST

TITLE		A12, 10 MHz REFERENCE PC ASSEMBLY #05702301				
ITEM	REF	COMPONENT DESCRIPTION	MFR'S CODE	MANUFACTURER'S PART NUMBER	SD STOCK NUMBER	T/Q
		PC BOARD	52542	057023	057023	1
	C1	CAPACITOR, Ceramic .01 µF 20%, 500V	91418	TYPE SM	100075	12
	C2	Same as C1				
	C3	Same as C1				
	C4	Same as C1				
	C5	CAPACITOR, Ceramic 1 µF 20%, 50V	56289	5CZ5U105X0050C5	100176	2
	C6	CAPACITOR, Tant 39 µF 10%, 10V	56289	150D396X9010B2	100183	1
	C7	CAPACITOR, Ceramic .1 µF 20%, 50V	56289	5C023104X0500C5	100178	2
	C8	Same as C7				
	C9	Same as C1				
	C10	CAPACITOR, Mica 33 pF 5%, 500V	72136	DM15ED330JO	10017501	1
	C11	Same as C1				
	C12	Same as C1				
	C13	CAPACITOR, Ceramic 1000 pF 20%, 1 kV	91418	TYPE B	100076	2
	C14	Same as C1				
	C15	CAPACITOR, Mica 470 pF 5%, 500V	72136	DM15FC471JO	10022101	1
	C16	CAPACITOR, Mica 82 pF 5%, 500V	72136	DM15ED820JO	10017201	
	C17	CAPACITOR, Mica 15 pF 5%, 500V	72136	DM15CD150JO	10024101	1
	C18	Same as C5				
	C19	Same as C1				
	C20	Same as C1				
	C21	Same as C13				
	C22	Same as C1				
	C23	Same as C1				
	C24	Same as C1				

TITLE A12, 10 MHz REFERENCE PC ASSEMBLY #05702301 (Cont'd)

ITEM	REF	COMPONENT DESCRIPTION	MFR'S CODE	MANUFACTURER'S PART NUMBER	SD STOCK NUMBER	T/Q
	CR1	DIODE, Signal 50V	03508	1N4151	100385	4
	CR2	Same as CR1				
	CR3	Same as CR1				
	CR4	Same as CR1				
	CR5	DIODE, Capacitor 550 pF	04713	SMV1157	100462	1
	CR6	Same as VR1				
	CR7	Same as CR1				
	L1	INDUCTOR, Fixed 1000 H, 5%	72259	WEE-1000	101303	1
	L2	INDUCTOR, Fixed 1 H 10%	99800	1537-12	101312	1
	Q1	TRANSISTOR, SINPN	02735	2N5179	101388	1
	Q2	TRANSISTOR, SINPN	07293	PN4275-18	102716	2
	Q3	Same as Q2				
	R1	RESISTOR, CC 1.5 k 5%, 1/4W	01121	CB1525	101577	2
	R2	RESISTOR, CC 470 Ω 5%, 1/4W	01121	CB4715	101625	5
	R3	RESISTOR, CC 10 k 5%, 1/4W	01121	CB1035	101570	7
	R4	Same as R3				
	R5	Same as R1				
	R6	Same as R2				
	R7	RESISTOR, CC 1.2 k 5%, 1/4W	01121	CB1225	101581	2
	R8	Same as R7				
	R9	RESISTOR, CC 270 Ω 5%, 1/4W	01121	CB2715	101542	2
	R10	Same as R9				
	R11	Same as R2				
	R12	Same as R3				
	R13	Same as R3				
	R14	Same as R3				

TITLE	A12, 10 MHz REFERENCE PC ASSEMBLY #05702301 (Cont'd)				
ITEM	REF	COMPONENT DESCRIPTION	MFR'S CODE	MANUFACTURER'S PART NUMBER	SD STOCK NUMBER	T/Q
	R15	RESISTOR, CC 680 Ω 5%, 1/4W	01121	CB6815	101669	1
	R16	RESISTOR, CC 330 Ω 5%, 1/4W	01121	CB3315	101536	1
	R17	RESISTOR, CC 3.9 k 5%, 1/4W	01121	CB3925	101601	2
	R18	Same as R17				
	R19	RESISTOR, CC 1 k 5%, 1/4W	01121	CB1025	101569	2
	R20	Same as R2				
	R21	RESISTOR, CC 2.7 k 5%, 1/4W	01121	CB2725	101599	1
	R22	Same as R3				
	R23	Same as R2				
	R24	Same as R3				
	R25	RESISTOR, CC 100 Ω 5%, 1/4W	01121	CB1015	101609	1
	R26	Same as R19				
	TP1	TEST POINT, White	91506	8041-1G9	100529	1
	U1	INTEGRATED CIRCUIT, TTL SSI NAND Gate Schmitt	01295	SN74S132N	045271	1
	U2	INTEGRATED CIRCUIT, TTL SSI Dual J-K Flip-Flop	01295	SN7473N	019709	1
	U3	INTEGRATED CIRCUIT, TTL MSI Decade Counter	01295	SN7490N	025732	1
	U4	INTEGRATED CIRCUIT, TTL MSI Dual 4 to 1 Mux 3ST	01295	SN74LS253N	103221	1
	U5	INTEGRATED CIRCUIT, TTL MSI Phase-Frequency Detector	04713	MC4044P	045238	1
	U6	INTEGRATED CIRCUIT Operational Amplifier	02735	CA3130T	103231	1
	U7	INTEGRATED CIRCUIT, TTL MSI Syn BCD Up/Down Counter	01295	SN74LS192N	103106	2
	U8	Same as U7				
	U9	INTEGRATED CIRCUIT, TTL SSI NAND Gate 4 x 2IN Schmitt	01295	SN74132N	045270	1

REPLACEABLE PARTS LIST

TITLE	A12, 10 MHz REFERENCE PC ASSEMBLY #05702301 (Cont'd)					
ITEM	REF	COMPONENT DESCRIPTION	MFR'S CODE	MANUFACTURER'S PART NUMBER	SD STOCK NUMBER	T/O
	W1	JUMPER, Molded	Gettig	L-2007-1	102879	1
	Y1	CRYSTAL, 10 MHz IN TO-5 Can	52542	039483	039483	1
		Insulator			100666	1

REPLACEABLE PARTS LIST

TITLE A13, REMOTE BOARD PC ASSEMBLY #05391901

ITEM	REF	COMPONENT DESCRIPTION	MFR'S CODE	MANUFACTURER'S PART NUMBER	SD STOCK NUMBER	T/O
		PC BOARD	52542	053919	053919	1
	R1	RESISTOR, CC 12 k 5%, 1/4W	01121	CB1235	101565	3
	R2	RESISTOR, Module 12 k 20%, .1W	52542	045008	045008	2
	R3	Same as R1				
	R4	Same as R1				
	R5	Same as R2				
	U1	INTEGRATED CIRCUIT, SSI Quad 2-Input NAND Gate	01295	SN74L03N	045217	1
	U2	INTEGRATED CIRCUIT, TTL Open Collector	01295	SN7489N	103219	1
	U3	INTEGRATED CIRCUIT, TTL Quad 2-Input NOR Gate	04713	MC3002P	025739	1
	U4	INTEGRATED CIRCUIT, TTL 8-Bit/3 State MUXR	01295	SN74LS251N	103220	4
	U5	INTEGRATED CIRCUIT, TTL Dual Mux	01295	SN74LS253N	103221	2
	U6	Same as U4				
	U7	Same as U4				
	U8	Same as U5				
	U9	Same as U4				
	U10	INTEGRATED CIRCUIT, TTL Quad Latch	01295	SN74L75N	045201	1
		EXTRACTOR, Hot Stamp A13	52542	03984213	03984213	1
		EXTRACTOR	51495	1743	100865	2
		PIN, Roll	73957	50-094-0250	100752	2

REPLACEABLE PARTS LIST

TITLE	OPTION 05 A13, REMOTE BOARD PC ASSEMBLY #05391902				
ITEM	REF	COMPONENT DESCRIPTION	MFR'S CODE	MANUFACTURER'S PART NUMBER	SD STOCK NUMBER	T/Q
		This Parts List is the same as the Parts List for the A13, Remote Board PC Assembly #05391901.				

REPLACEABLE PARTS LIST

TITLE OPTION 06 A13, IEEE-488(2) PC ASSEMBLY #05739401

ITEM	REF	COMPONENT DESCRIPTION	MFR'S CODE	MANUFACTURER'S PART NUMBER	SD STOCK NUMBER	T/O
		PC BOARD	52542	057394	057394	1
	C1	CAPACITOR, Ceramic 1000 pF 20%, 1 kV	91418	TYPE B	100076	2
	C2	Same as C1				
	C3	CAPACITOR, Tant 47 µF 10%, 20V	56289	150D476X9020R2	100186	1
	C4	CAPACITOR, Mica 330 pF 5%, 500V	72136	DM15FD331JO	10027601	2
	C5	Same as C4				
	C6	CAPACITOR, Mica 270 pF 5%, 500V	72136	DM15FD271JO	10023801	1
	Q1	TRANSISTOR, SINPN	27018	PN3646	101369	1
	R1	RESISTOR, CC 12 k 5%, 1/4W	01121	CB1235	101565	1
	R2	RESISTOR, CC 22 k 5%, 1/4W	01121	CB2235	101572	4
	R3	Same as R2				
	R4	RESISTOR, CC 10 k 5%, 1/4W	01121	CB1035	101570	1
	R5	RESISTOR, CC 27 k 5%, 1/4W	01121	CB2735	101587	1
	R6	Same as R2				
	R7	Same as R2				
	R8	RESISTOR, CC 1 k 5%, 1/4W	01121	CB1025	101569	1
	R9	RESISTOR, CC 3.9 k 5%, 1/4W	01121	CB3926	101601	1
	U1	INTEGRATED CIRCUIT, TTL SSI Dual VC Multivibrator	04713	MC4024P	045206	1
	U2	INTEGRATED CIRCUIT, TTL SSI Dual 1-Shot	01295	SN74LS123N	103976	2
	U3	INTEGRATED CIRCUIT, TTL SSI 4 2-Input OR Gate	01295	SN74LS32N	103972	3
	U4	INTEGRATED CIRCUIT, TTL SSI Quad 2-Input NAND Gate	01295	SN74LS00N	103130	2
	U5	INTEGRATED CIRCUIT, TTL SSI Hex Inverter	01295	SN74LS04N	103749	1

REPLACEABLE PARTS LIST

TITLE OPTION 06 A13, IEEE-488(2) PC ASSEMBLY #05739401 (Cont'd)

ITEM	REF	COMPONENT DESCRIPTION	MFR'S CODE	MANUFACTURER'S PART NUMBER	SD STOCK NUMBER	T/Q
	U6	INTEGRATED CIRCUIT, TTL SSI 4 s-Input AND Gate	01295	SN74LS08N	103967	2
	U7	Same as U4				
	U8	INTEGRATED CIRCUIT, TTL SSI Dual D Flip-Flop Set,Dle	01295	SN74LS74N	103132	2
	U9	Same as U2				
	U10	Same as U6				
	U11	Same as U8				
	U12	Same as U3				
	U13	Same as U3				
	U14	INTEGRATED CIRCUIT, TTL SSI 8-Input NAND Gate	01295	SN74LS30N	103971	1
	U15	INTEGRATED CIRCUIT, TTL SSI 5-Bit Magtd Comparator	07263	93L24PC	117020	1
	U16	RESISTOR, CC Module 4-12 k 20%, .1W	52542	045008	045008	1
		EXTRACTOR	52542	03984213	03984213	1
		EXTRACTOR, PC 1/16 Mat	51495	1743	100865	1
		PIN, Roll	73957	50-094-0250	100752	2
		CONNECTOR, Rectangular 24-pin Remale Chas Rec (488)	02660	57-20240-2(383)	1007054	1

REPLACEABLE PARTS LIST

TITLE	A14, FREQUENCY CONTROL PC ASSEMBLY #05392801					
ITEM	REF	COMPONENT DESCRIPTION	MFR'S CODE	MANUFACTURER'S PART NUMBER	SD STOCK NUMBER	T/Q
		PC BOARD	52542	053928	053928	1
	C1	CAPACITOR, Ceramic 1000 pF 20%, 50V	71590	CW15C102M	100251	2
	C2	Same as C1				
	C3	CAPACITOR, Mica 470 pF 5%, 300V	72136	DM15FC471JO	100221	1
	C4	CAPACITOR, Mica 100 pF 5%, 500V	72136	DM15FD101JO	10017301	1
	R1	Not Used				
	R2	RESISTOR, CC 470 Ω 5%, 1/8W	01121	BB4715	101709	1
	R3	RESISTOR, CC 5.6 k 5%, 1/8W	01121	BB5625	101715	1
	R4	RESISTOR, CC 22 k 5%, 1/8W	01121	BB2235	101797	3
	R5	Same as R4				
	R6	Same as R4				
	R7	RESISTOR, CC Module 4-12 k 20%, .1W	52542	045008	045008	1
	R8	RESISTOR, CC Module 4-5 k 20%, .1W	52542	027867	027867	1
	U1	INTEGRATED CIRCUIT, TTL MSI BCD-DEC Decoder ICCLT	01295	SN74LS42N	103131	1
	U2	INTEGRATED CIRCUIT, TTL SSI Quad 2IN OR Gates	01295	SN7432N	045257	1
	U3	INTEGRATED CIRCUIT, CMOS Hex CMOS-TTL Buffer	04713	MC14010CP	045285	2
	U4	INTEGRATED CIRCUIT, CMOS Dual D F/F,IN D,CLK	04713	MC14013CP	103199	1
	U5	INTEGRATED CIRCUIT, TTL SSI Dual One-Shot Multivibrator	01295	SN74123N	045209	1
	U6	INTEGRATED CIRCUIT, TTL SSI Quad 2-IN NAND Gate	01295	SN74L03N	045217	1
	U7	Same as U3				
	U8	INTEGRATED CIRCUIT, TTL MSI 4-2IN Muxr,S,7E 16	01295	SN74L157N	103270	1

TITLE A14, FREQUENCY CONTROL PC ASSEMBLY #05392801 (Cont'd)

ITEM	REF	COMPONENT DESCRIPTION	MFR'S CODE	MANUFACTURER'S PART NUMBER	SD STOCK NUMBER	T/O
	U9	INTEGRATED CIRCUIT, TTL SSI Hex Inverter	01295	SN7404N	025779	3
	U10	Same as U9				
	U11	Same as U9				
	U12	INTEGRATED CIRCUIT, CMOS BCD-DEC DCD	04713	MC14028BCP	045286	1
	U13	INTEGRATED CIRCUIT, CMOS BCD-PRST Up-Down Counter	04713	MC14510BCP	045287	1
	U14	INTEGRATED CIRCUIT, DTL Quad 2-IN NAND Gates	01295	SN15846N	019716	1
	U15	INTEGRATED CIRCUIT, TTL SSI 4-3 State Bus Buffer LO	01295	SN74126N	045298	1
	U16	INTEGRATED CIRCUIT, CMOS 4-Bit AND/OR Selector	04713	MC14519BCP	045288	1
		EXTRACTOR	52542	03984214	03984214	1
		EXTRACTOR, PC	51495	1743	100865	1
		PIN, Roll			100752	2
		JUMPER, #24AWG Insulated				

REPLACEABLE PARTS LIST

TITLE	OPTION 05 A14, FREQUENCY CONTROL PC ASSEMBLY #05392802				
ITEM	REF	COMPONENT DESCRIPTION	MFR'S CODE	MANUFACTURER'S PART NUMBER	SD STOCK NUMBER	T/O
		This Parts List is the same as the Parts List for the A14, Frequency Control PC Assembly #05392801.				

REPLACEABLE PARTS LIST

TITLE	OPTION 09 A14, FREQUENCY CONTROL PC ASSEMBLY #05392803				
ITEM	REF	COMPONENT DESCRIPTION	MFR'S CODE	MANUFACTURER'S PART NUMBER	SD STOCK NUMBER	T/O
		This Parts List is the same as the Parts List for the A14, Frequency Control PC Assembly #05392801.				

REPLACEABLE PARTS LIST

TITLE	OPTION 09,05 A14, FREQUENCY CONTROL PC ASSEMBLY #05392804					
ITEM	REF	COMPONENT DESCRIPTION	MFR'S CODE	MANUFACTURER'S PART NUMBER	SD STOCK NUMBER	T/O
		This Parts List is the same as the Parts List for the A14, Frequency Control PC Assembly #05392801.				

REPLACEABLE PARTS LIST

TITLE		OPTION 09 A15, MULTI COMPUTER CALCULATOR PC ASSEMBLY #05399201				
ITEM	REF	COMPONENT DESCRIPTION	MFR'S CODE	MANUFACTURER'S PART NUMBER	SD STOCK NUMBER	T/Q
		PC BOARD	52542	053992	053992	1
	C1	CAPACITOR, Ceramic 1 µF 20%, 50V	56289	5CZ5U105X0050C5	100176	4
	C2	Same as C1				
	C3	CAPACITOR, Mica 470 pF 5%, 300V	72136	DM15FC471JO	10022101	1
	C4	Same as C1				
	C5	Same as C1				
	R1	RESISTOR, CC 120 Ω 5%, 1W	01121	GB1215	101839	2
	R2	Same as R1				
	R3	RESISTOR, CC 10 k 5%, 1/8W	01121	BB1035	101697	3
	R4	Same as R3				
	R5	RESISTOR, CC 4.7 k 5%, 1/8W	01121	BB4725	101792	17
	R6	RESISTOR, CC 680 Ω 5%, 1/8W	01121	BB6815	101972	17
	R7	RESISTOR, CC 2.2 k 5%, 1/8W	01121	BB2225	101719	4
	R8	Same as R7				
	R9	Same as R7				
	R10	Same as R5				
	R11	Same as R6				
	R12	Same as R5				
	R13	Same as R6				
	R14	Same as R6				
	R15	Same as R6				
	R16	Same as R6				
	R17	Same as R6				
	R18	Same as R6				
	R19	Same as R6				
	R20	Same as R6				
	R21	Same as R6				

TITLE OPTION 09 A15, MULTI COMPUTER CALCULATOR PC ASSEMBLY #05399201 (Cont'd)

ITEM	REF	COMPONENT DESCRIPTION	MFR'S CODE	MANUFACTURER'S PART NUMBER	SD STOCK NUMBER	T/Q
	R22	Same as R6				
	R23	Same as R6				
	R24	Same as R6				
	R25	Same as R6				
	R26	Same as R6				
	R27	Same as R6				
	R28	Same as R5				
	R29	Same as R5				
	R30	Same as R5				
	R31	Same as R5				
	R32	Same as R5				
	R33	Same as R5				
	R34	Same as R5				
	R35	Same as R5				
	R36	Same as R5				
	R37	Same as R5				
	R38	Same as R5				
	R39	Same as R5				
	R40	Same as R5				
	R41	Same as R5				
	R42	Same as R7				
	R43	Same as R3				
	U1	INTEGRATED CIRCUIT, TTL SSI Quad 2-IN AND Gates	04713	MC3001P	025740	5
	U2	INTEGRATED CIRCUIT, TTL SSI 4-2IN AND Open Coll	01295	SN7409N	103321	1
	U3	Same as U1				
	U4	Same as U1				
	U5	INTEGRATED CIRCUIT, TTL SSI Quad 2-IN OR Gates	04713	MC3003P	025767	2
	U6	Same as U1				
	U7	Same as U1				
	U8	Same as U5				

TITLE OPTION 09 A15, MULTI COMPUTER CALCULATOR PC ASSEMBLY #05399201 (Cont'd)

ITEM	REF	COMPONENT DESCRIPTION	MFR'S CODE	MANUFACTURER'S PART NUMBER	SD STOCK NUMBER	T/Q
	U9	INTEGRATED CIRCUIT, MOS LSI 10-Digit Dec Arith Procsr	01295	TMS0117NC	103322	1
	U10	INTEGRATED CIRCUIT Operational Amplifier	02735	CA3130T	103231	1
		EXTRACTOR	52542	03984215	03984215	1
		EXTRACTOR	51495	1743	100865	1
		PIN, Roll	73957	50-094-0250	100752	2
		JUMPER, #22AWG Insulated				

REPLACEABLE PARTS LIST

TITLE A16, D/A CONVERTER PC ASSEMBLY #05550201

ITEM	REF	COMPONENT DESCRIPTION	MFR'S CODE	MANUFACTURER'S PART NUMBER	SD STOCK NUMBER	T/Q
		PC BOARD	52542	055502	055502	1
	C1	CAPACITOR, Mica 100 pF 5%, 500V	72136	DM15FD101JO	10017301	1
	C2	CAPACITOR, Ceramic .01 µF +80-20%, 100V	91418	TA110	100103	2
	C3	Same as C2				
	C4	CAPACITOR, Ceramic .1 µF 20%, 50V	56289	5C023104X0500C5	100178	2
	C5	Same as C4				
	C6	CAPACITOR, Selected in Test				
	R1	RESISTOR, MF 301 k 1%, .12W	91637	MFF 1/8 T1	102871	1
	R2	RESISTOR, MF 3.74 k 1%, .12W	19701	MF5C-D-3471-F	102186	1
	R3	RESISTOR, MF 10 k 1%, .12W	19701	MF5C-D-1002-F	102098	2
	R4	RESISTOR, Variable 20 k 10%, 3/8W	73138	89PR20K	102470	1
	R5	Same as R3				
	R6	RESISTOR, MF 1 k 1%, .12W	19701	MF5C-D-1001F	102097	2
	R7	Same as R6				
	R8	RESISTOR, Variable 20 Ω 20%, 3/8W	73138	89PR20	102154	1
	U1	INTEGRATED CIRCUIT, TTL MSI Quad Latch	01295	SN7475N	019710	2
	U2	Same as U1				
	U3	DAC Assembly 12-Bit 102 mA EO10V	24335	AD563JD/BCD	103838	1
	U4	INTEGRATED CIRCUIT Operational Amplifier	27014	LF356H	103701	1

REPLACEABLE PARTS LIST

TITLE OPTION 09 A17, MULTI COMPUTER LOGIC #05392101

ITEM	REF	COMPONENT DESCRIPTION	MFR'S CODE	MANUFACTURER'S PART NUMBER	SD STOCK NUMBER	T/O
		PC BOARD	52542	053931	053931	1
	C1	CAPACITOR, Ceramic 1 µF 20%, 50V	56289	5CZ5U105X0050C5	100176	3
	C2	CAPACITOR, Ceramic .01 µF +80-20%, 100V	91418	TA110	100103	1
	C3	Same as C1				
	C4	Same as C1				
	Q1	TRANSISTOR, SIPNP	07263	PN3640-18	101357	1
	Q2	TRANSISTOR, SINPN	04713	2N3904	101377	1
	Q3	TRANSISTOR, SIPNP	04713	2N3906	101378	1
	R1	RESISTOR, CC 220 Ω 5%, 1/4W	01121	CB2215	101566	4
	R2	Same as R1				
	R3	Same as R1				
	R4	RESISTOR, CC 470 Ω 5%. 1/4W	01121	CB4715	101625	1
	R5	Same as R1				
	R6	RESISTOR, CC 10 k 5%, 1/4W	01121	CB1035	101570	1
	R7	RESISTOR, CC 1.5 k 5%, 1/4W	01121	CB1525	101577	1
	R8	RESISTOR, CC 27 k 5%, 1/4W	01121	CB2735	101587	1
	R9	RESISTOR, CC 100 k 5%, 1/4W	01121	CB1045	101558	1
	R10	RESISTOR, CC 270 k 5%, 1/4W	01121	CB2745	101769	1
	U1	INTEGRATED CIRCUIT, TTL SSI Hex Inverter	01295	SN7404N	025779	2
	U2	INTEGRATED CIRCUIT, TTL SSI Quad 2-Input OR Gate	04713	MC3003P	025767	1
	U3	INTEGRATED CIRCUIT, TTL MSI 4-Bit Binary Counter	01295	SN7493N	025715	1
	U4	INTEGRATED CIRCUIT, TTL MSI BCD-Decimal Decoder	01295	SN7442N	025749	1

TITLE		OPTION 09 A17, MULTI COMPUTER LOGIC #05392101 (Cont'd)				
ITEM	REF	COMPONENT DESCRIPTION	MFR'S CODE	MANUFACTURER'S PART NUMBER	SD STOCK NUMBER	T/Q
	U5	INTEGRATED CIRCUIT, TTL SSI Dual D Flip-Flop	01295	SN7474N	025241	1
	U6	INTEGRATED CIRCUIT, TTL MSI Dual 4 to 1 Mux 3ST	01295	SN74LS253N	103221	1
	U7	INTEGRATED CIRCUIT, TTL SSI 4-3 State Bus Buffer LO	01295	SN74126N	045298	1
	U8	Same as U1				
	U9	INTEGRATED CIRCUIT, TTL SSI Quad 2-Input AND Gates	01295	SN7408N	103093	2
	U10	Same as U9				
	U11	INTEGRATED CIRCUIT, LIN MSC Wide Range Timer	18324	NE555V	045208	
		EXTRACTOR	52542	03984217	03984217	1
		EXTRACTOR, PC 1/16 Mat	51495	1743	100865	1
		PIN, Roll	73957	50-094-0250	100752	2

TITLE		OPTION 09 A18, D TO A MULTI COMPUTER PC ASSEMBLY #05392001				
ITEM	REF	COMPONENT DESCRIPTION	MFR'S CODE	MANUFACTURER'S PART NUMBER	SD STOCK NUMBER	T/Q
		PC BOARD	52542	053920	053920	1
	C1	CAPACITOR, Mica 33 pF 5%, 500V	72136	DM15ED330JO	10017501	2
	C2	CAPACITOR, Ceramic .1 µF 20%, 50V	56289	5C023104X0500C5	100178	1
	C3	Same as C1				
	C4	CAPACITOR, Ceramic .01 µF +80-20%, 100V	91418	TA110	100103	4
	C5	Same as C4				
	C6	Not Used				
	C7	Same as C4				
	C8	Same as C4				
	K1	RELAY, Reed DIP 5V	15636	RA3023	101293	1
	R1	RESISTOR, CC 4-12 k 20%, .1W	52542	045008	045008	1
	R2	RESISTOR, CC 12 k 5%, 1/4W	01121	CB1235	101565	1
	R3	RESISTOR, MF 20 k 1%, .25W	91637	MFF 1/4 T1	102202	2
	R4	RESISTOR, MF 10 k 1%, .12W	19701	MF5C-D-1002-F	102098	4
	R5	RESISTOR, MF 6.81 k 1%, .12W	91637	MFF 1/8	102118	1
	R6	RESISTOR, MF 442 Ω 1%, .12W	91637	MFF-1/8 T1	102228	1
	R7	RESISTOR, MF 3.32 k 1%, .12W	91637	MFF-1/8 T1	102114	1
	R8	Same as R3				
	R9	Same as R4				
	R10	RESISTOR, CC 100 Ω 5%, 1/4W	01121	CB1015	101609	1
	R11	RESISTOR, Variable 50 Ω 20%, 3/8W	73138	89PR50	102184	1
	R12	RESISTOR, Variable 1 k 10%, 3/8W	73138	89PR1K	102181	1

TITLE OPTION 09 A18, D TO A MULTI COMPUTER PC ASSEMBLY #05392001 (Cont'd)

ITEM	REF	COMPONENT DESCRIPTION	MFR'S CODE	MANUFACTURER'S PART NUMBER	SD STOCK NUMBER	T/Q
	R13	RESISTOR, CC 18 k 5%, 1/4W	01121	CB1835	101579	1
	R14	Same as R4				
	R15	RESISTOR, MF 1 k 1%, .12W	19701	MF5C-D-1001 F	102097	2
	R16	RESISTOR, Variable 20 k 10%, 3/8W	73138	89PR20K	102470	1
	R17	Same as R15				
	R18	Same as R4				
	R19	RESISTOR, MF 301 k 1%, .12W	91637	MFF 1/8 T1	102871	1
	R20	RESISTOR, MF 3.74 k 1%, .12W	19701	MF5C-D-3741-F	102186	
	U1	INTEGRATED CIRCUIT, TTL MSI 4-10 Line Dec/Driver	01295	SN74145N	025754	1
	U2	INTEGRATED CIRCUIT, TTL MSI Quad Latch	01295	SN7475	019710	2
	U3	INTEGRATED CIRCUIT, TTL SSI Quad 2-Input OR Gates	04713	MC3003P	025767	2
	U4	Same as U3				
	U5	INTEGRATED CIRCUIT, TTL SSI Quad 2-INput NAND Gate	04713	MC3000P	025766	1
	U6	Same as U2				
	U7	INTEGRATED CIRCUIT, TTL SSI Dual 4-Input NAND Gates	01295	SN7420N	025713	2
	U8	Same as U7				
	U9	INTEGRATED CIRCUIT, TTL MSI Quad Latch	01295	SN74L75N	045201	1
	U10	DAC Assembly, 12-Bit 102 mA	24335	AD563JD/BCD	103838	1
	U11	INTEGRATED CIRCUIT, OP AMP	27014	LM301AH	025745	1
	U12	INTEGRATED CIRCUIT, OP AMP	27014	LM201AH	025758	1
	U13	INTEGRATED CIRCUIT, OP AMP	27014	LF356H	103701	1
	VR1	DIODE, Ref 6.2V .01%	04713	1N821	100377	1
		EXTRACTOR	52542	03984281	03984281	1
		EXTRACTOR	51495	1743	100865	1
		PIN, Roll	73957	50-094-0250	100752	2

REPLACEABLE PARTS LIST

TITLE		A19, REMOTE BOARD PC ASSEMBLY #05741501				
ITEM	REF	COMPONENT DESCRIPTION	MFR'S CODE	MANUFACTURER'S PART NUMBER	SD STOCK NUMBER	T/Q
		PC BOARD	52542	057415	057415	1
	C1	CAPACITOR, Ceramic .01 µF +80-20%, 100V	91418	TA110	100103	2
	C2	CAPACITOR, Tant 4.7 µF 10%, 10V	56289	150D475X9010A2	100205	
	C3	Same as C1				
	R1	RESISTOR, CC 5.1 k 5%, 1/4W	01121	CB5125	101541	1
	U1	INTEGRATED CIRCUIT, TTL SSI Quad 2-Input OR Gate	01295	SN7432N	045257	1
	U2	INTEGRATED CIRCUIT, TTL MSI Quad Latch	01295	SN74L75N	045201	1
	U3	INTEGRATED CIRCUIT, TTL MSI 8-Bit/3-State Muxr	01295	SN74LS251N	103220	4
	U4	INTEGRATED CIRCUIT, TTL MSI Dual 4 to 1 Mux 3ST	01295	SN74LS253N	103221	2
	U5	Same as U3				
	U6	Same as U3				
	U7	Same as U4				
	U8	Same as U3				
	U9	INTEGRATED CIRCUIT, TTL SSI 4-2 Input NAND Open-Call	01295	SN7403N	103218	1
	U10	INTEGRATED CIRCUIT, TTL RAM Open Coll, CE,W	01295	SN7489N	103219	1
	U11	INTEGRATED CIRCUIT TTL SSI Hex Inverter	01295	SN7404N	025779	1
	U12,13	RESISTOR, CC Module 4-12 k 20%, .1W	52542	045008	045008	2
		EXTRACTOR	52542	03984219	03984219	1
		EXTRACTOR, PC 1/16 Mat	51495	1743	100865	1
		PIN, Roll	73957	50-094-0250	100752	2
		ASSEMBLY, Cable Rem Prog Interface 1600B	52542	05749301	05749301	1
		TIE, Cable			100753	1

REPLACEABLE PARTS LIST

TITLE	OPTION 05 A19, REMOTE BOARD PC ASSEMBLY #05741502				
ITEM	REF	COMPONENT DESCRIPTION	MFR'S CODE	MANUFACTURER'S PART NUMBER	SD STOCK NUMBER	T/Q
		This Parts List is the same as the Parts List for the A19, Remote Board PC Assembly except for jumper changes. Refer to Remote Board Schematic.				

TITLE OPTION 06 A19, IEEE-488(1) PC ASSEMBLY #05743001

ITEM	REF	COMPONENT DESCRIPTION	MFR'S CODE	MANUFACTURER'S PART NUMBER	SD STOCK NUMBER	T/O
		PC BOARD	52542	057430	057430	1
	C1	CAPACITOR, Ceramic 1000 pF 20%, 50V	71590	CW15C102M	100251	1
	C2	CAPACITOR, Tant 4.7 µF 10%, 10V	56289	150D475X9010A2	100205	
	C3	CAPACITOR, Ceramic .01 µF +80-20%, 100V	91418	TA110	100103	4
	C4	Same as C3				
	C5	Same as C3				
	C6	Same as C3				
	R1	RESISTOR, CC 3.0 k 5%, 1/8W	01121	BB3025	101913	16
	R2	RESISTOR, CC 6.2 k 5%, 1/8W	01121	BB6225	101740	16
	R3	Same as R1				
	R4	Same as R2				
	R5	Same as R1				
	R6	Same as R2				
	R7	Same as R1				
	R8	Same as R2				
	R9	Same as R1				
	R10	Same as R2				
	R11	Same as R1				
	R12	Same as R2				
	R13	Same as R1				
	R14	Same as R2				
	R15	Same as R1				
	R16	Same as R2				
	R17	Same as R1				
	R18	Same as R2				
	R19	Same as R1				
	R20	Same as R2				
	R21	Same as R1				

TITLE	OPTION 06 A19, IEEE-488(1) PC ASSEMBLY #05743001 (Cont'd)					
ITEM	REF	COMPONENT DESCRIPTION	MFR'S CODE	MANUFACTURER'S PART NUMBER	SD STOCK NUMBER	T/O
	R22	Same as R2				
	R23	Same as R1				
	R24	Same as R2				
	R25	Same as R1				
	R26	Same as R2				
	R27	Same as R1				
	R28	Same as R2				
	R29	Same as R1				
	R30	Same as R2				
	R31	Same as R1				
	R32	Same as R2				
	R33	RESISTOR, CC 12 k 5%, 1/8W	01121	BB1235	101975	1
	R34	RESISTOR, CC 22 k 5%, 1/8W	01121	BB2235	101797	1
	U1	INTEGRATED CIRCUIT, TTL SSI Hex Buffer Open Collector	01295	SN7417N	106629	1
	U2	INTEGRATED CIRCUIT, TTL SSI Hex Inverter	01295	SN74LS04N	103749	1
	U3	INTEGRATED CIRCUIT, TTL SSI 6-Inverter Schmitt	01295	SN7414N	117078	2
	U4	INTEGRATED CIRCUIT, TTL SSI Dual 4-Input NOR W/Strob	01295	SN7425N	045296	1
	U5	Same as U3				
	U6	INTEGRATED CIRCUIT, TTL SSI 4-Input NAND Gate	01295	SN74LS20N	103969	1
	U7	INTEGRATED CIRCUIT, RAM Open Collector, CE,W	01295	SN7489N	103219	2
	U8	Same as U7				
	U9	INTEGRATED CIRCUIT, TTL SSI 3 3-Input NAND Gate	01295	SN74LS10N	103968	2
	U10	INTEGRATED CIRCUIT, TTL MSI Quad 2-1 Data Select	01295	SN74157N	045242	1
	U11	INTEGRATED CIRCUIT, TTL MSI Prst. Binary Counter 2,8	01295	SN74LS197N	103165	1

TITLE OPTION 06 A19, IEEE-488(1) PC ASSEMBLY #05743001 (Cont'd)

ITEM	REF	COMPONENT DESCRIPTION	MFR'S CODE	MANUFACTURER'S PART NUMBER	SD STOCK NUMBER	T/Q
	U12	Same as U9				
	U13	INTEGRATED CIRCUIT, TTL SSI 4 2-Input AND Gate	01295	SN74LS08N	103967	1
	U14	INTEGRATED CIRCUIT, TTL SSI Dual D Flip-Flop Set,Cle	01295	SN74LS74N	103132	2
	U15	INTEGRATED CIRCUIT, TTL SSI Dual Rectangular 1-Shot	01295	SN74LS123N	103976	1
	U16	INTEGRATED CIRCUIT, TTL SSI Quad 2-Input NAND Gate	01295	SN74LS00N	103130	1
	U17	Same as U14				
	U18	RESISTOR, CC Module 4-5 k 20%, .1W	52542	027867	027867	2
	U19	Same as U18				
		EXTRACTOR	52542	03984219	03984219	1
		EXTRACTOR, PC 1/16 Mat	51495	1743	100865	1
		PIN, Roll	73957	50-094-0250	100752	2
		ASSEMBLY, Cable IEEE Interface 1600B	52542	05748401	05748401	1
		TIE, Cable	52542	05748401	05748401	1

REPLACEABLE PARTS LIST

TITLE	A20, LOCK INDICATOR PC ASSEMBLY #05373301				
ITEM	REF	COMPONENT DESCRIPTION	MFR'S CODE	MANUFACTURER'S PART NUMBER	SD STOCK NUMBER	T/O
		PC BOARD	52542	053733	053733	
	C1	CAPACITOR, Ceramic 1 µF 20%, 50V	56289	5CZ5U105X0050C5	100176	1
	C2	CAPACITOR, Ceramic .1 µF 20%, 50V	56289	5C023104X0500C5	100178	
	C3	CAPACITOR, Ceramic .01 µF +80-20%, 100V	91418	TA110	100103	4
	C4	Same as C3				
	C5	Same as C3				
	C6	Same as C2				
	C7	Same as C3				
	CR1 thru CR25	DIODE, Signal 50V	03508	1N4151	100385	25
	CR26	DIODE, Signal 20V	03508	1N4830	100440	2
	CR27	Same as CR26				
	Q1	TRANSISTOR, SINPN	04713	2N3904	101377	3
	Q2	Same as Q1				
	Q3	Same as Q1				
	Q4	TRANSISTOR, SINPN	07263	PN3643-5	101358	1
	R1	RESISTOR, Variable 50 k 10%, 3/8W	73138	89PR50K	102153	2
	R2	Same as R1				
	R3	RESISTOR, MF 10 k 1%, .12W	19701	MF5C-D-1002-F	102098	2
	R4	Same as R3				
	R5	RESISTOR, CC 100 k 5%, 1/4W	01121	CB1045	101558	2
	R6	RESISTOR, CC 10 k 5%, 1/4W	01121	CB1035	101570	2
	R7	RESISTOR, CC 470 Ω 5%, 1/4W	01121	CB4715	101625	3
	R8	Same as R5				
	R9	RESISTOR, CC 33 k 5%, 1/4W	01121	CB3335	101576	1

TITLE	A20, LOCK INDICATOR PC ASSEMBLY #05373301 (Cont'd)				
ITEM	REF	COMPONENT DESCRIPTION	MFR'S CODE	MANUFACTURER'S PART NUMBER	SD STOCK NUMBER	T/O
	R10	Same as R6				
	R11	Same as R7				
	R12	Not Used				
	R13	RESISTOR, CC 18 k 5%, 1/4W	01121	CB1835	101579	1
	R14	Same as R7				
	R15	RESISTOR, CC 560 Ω 5%, 1/4W	01121	CB5615	101583	2
	R16	Same as R15				
	R17	RESISTOR, CC 3.3 k 5%, 1/4W	01121	CB3325	101559	2
	R18	Same as R17				
	R19	RESISTOR, CC 2.2 k 5%, 1/4W	01121	CB2225	101562	1
	R20	RESISTOR, Selected in Test				1
	TP1	TEST POINT, Black	91506	8041-1G6	100520	1
	TP2	TEST POINT, Brown	91506	8041-1G3	100521	1
	TP3	TEST POINT, Red	91506	8041-1G4	100522	1
	TP4	TEST POINT, Orange	91506	8041-1G5	100523	1
	TP5	TEST POINT, Yellow	91506	8041-1G2	100524	1
	U1	INTEGRATED CIRCUIT	27014	LM301AH	025745	2
	U2	Same as U1				
		EXTRACTOR, Stamped A20	52542	03984220	03984220	1
		EXTRACTOR, PC 1/16 Mat	51495	1743	100865	1
		PIN, Roll	73957	50-094-0250	100752	2

REPLACEABLE PARTS LIST

TITLE A21, 100 MHz REFERENCE PC ASSEMBLY #05732701

ITEM	REF	COMPONENT DESCRIPTION	MFR'S CODE	MANUFACTURER'S PART NUMBER	SD STOCK NUMBER	T/Q
		PC BOARD	52542	057327	057327	1
	C1	CAPACITOR, Ceramic 1 µF 20%, 50V	56289	5CZ5U105X0050C5	100176	3
	C2	Same as C1				
	C3	CAPACITOR, Mica 33 pF 5%, 500V	72136	DM15ED330JO	10017501	5
	C4	CAPACITOR, Ceramic .01 µF 20%, 500V	91418	TYPE SM	100075	1
	C5	CAPACITOR, Tant 39 µF 10%, 20V	56289	150D396X9020R2	102561	1
	C6	Same as C3				
	C7	Same as C3				
	C8	CAPACITOR, Variable 1.7-11 pF Vert Adj PC Mt	74970	187-0106-005	100304	1
	C9	CAPACITOR, Ceramic 1000 pF 20%, 1 kV	91418	TYPE B	100076	2
	C10	Same as C9				
	C11	CAPACITOR, Ceramic 1000 pF 20%, 50V	71590	CW15C102M	100251	9
	C12	Same as C11				
	C13	Same as C11				
	C14	CAPACITOR, Mica 10 pF 5%, 500V	72136	DM15CD100JO	100253	1
	C15	Same as C11				
	C16	Same as C3				
	C17	Same as C11				
	C18	Not Used				
	C19	Same as C11				
	C20	Same as C11				
	C21	Same as C11				
	C22	CAPACITOR, Selected in Test				1
	C23	Same as C1				
	C24	CAPACITOR, Tant 100 µF 10%, 25V	56289	109D107X9025F2	100262	1

TITLE	A21, 100 MHz REFERENCE PC ASSEMBLY #05732701 (Cont'd)					
ITEM	REF	COMPONENT DESCRIPTION	MFR'S CODE	MANUFACTURER'S PART NUMBER	SD STOCK NUMBER	T/Q
	C25	CAPACITOR, Tant 100 µF 20%, 10V	56289	150D107X9010R2	100119	1
	C26	Same as C11				
	C27	CAPACITOR, Selected in Test				1
	C28	Same as C3				
	CR1	DIODE, Capacitor 10 pF	04713	MV2103	100433	1
	CR2	DIODE, Signal 50V	03508	1N4151	100385	3
	CR3	Same as CR2				
	CR4	Same as CR2				
	J1	RECEPTICAL, RF Jack	98291	51-053-0000	103173	1
	L1	Not Used				
	L2	INDUCTOR, Fixed 100 µH 5%	72259	WEE-100	101306	1
	L3	INDUCTOR, Fixed 2.7 µH 10%	72259	WEE-2.7	101299	1
	L4	INDUCTOR, Fixed 50 MH 10%	26618	A500K81-10	103117	1
	L5	INDUCTOR, Fixed .22 µH 20%	78526	DKM-.22	103006	1
	Q1	TRANSISTOR, SINPN	02735	2N5179	101388	1
	Q2	TRANSISTOR, MOSFET Dual Gate N-Channel	04713	MFE121	101413	2
	Q3	Same as Q2				
	R1	RESISTOR, CC 1.2 k 5%, 1/4W	01121	CB1225	101581	2
	R2	Same as R1				
	R3	RESISTOR, CC 6.8 k 5%, 1/4W	01121	CB6825	101544	2
	R4	Same as R3				
	R5	Not Used				
	R6	RESISTOR, CC 10 k 5%, 1/4W	01121	CB1035	101570	1
	R7	Not Used				
	R8	RESISTOR, CC 820 Ω 5%, 1/4W	01121	CB8215	101567	1

TITLE A21, 100 MHz REFERENCE PC ASSEMBLY #05732701 (Cont'd)

ITEM	REF	COMPONENT DESCRIPTION	MFR'S CODE	MANUFACTURER'S PART NUMBER	SD STOCK NUMBER	T/Q
	R9	RESISTOR, CC 220 Ω 5%, 1/4W	01121	CB2215	101566	1
	R10	RESISTOR, CC 33 k 5%, 1/4W	01121	CB3335	101576	2
	R11	RESISTOR, CC 3.9 k 5%, 1/4W	01121	CB3925	101601	1
	R12	RESISTOR, CC 56 Ω 5%, 1/4W	01121	CB5605	101735	1
	R13	RESISTOR, CC 270 Ω 5%, 1/4W	01121	CB2715	101542	1
	R14	RESISTOR, CC 820 k 5%, 1/4W	01121	CB8245	101850	1
	R15	RESISTOR, CC 470 k 5%, 1/4W	01121	CB4745	101630	1
	R16	RESISTOR, CC 100 Ω 5%, 1/4W	01121	CB1015	101609	2
	R17	RESISTOR, CC 150 Ω 5%, 1/4W	01121	CB1515	101615	1
	R18	Same as R16				
	R19	Not Used				
	R20	RESISTOR, CC 470 Ω 5%, 1/4W	01121	CB4715	101625	4
	R21	RESISTOR, CC 1.5 k 5%, 1/8W	01121	BB1525	101974	1
	R22	Not Used				
	R23	RESISTOR, CC 560 Ω 5%, 1/8W	01121	BB5615	101710	1
	R24	Not Used				
	R25	Not Used				
	R26	Not Used				
	R27	Same as R20				
	R28	RESISTOR, CC 390 Ω 5%, 1/4W	01121	CB3915	101592	1
	R29	RESISTOR, CC 1 k 5%, 1/4W	01121	CB1025	101569	3
	R30	Same as R29				

TITLE A21, 100 MHz REFERENCE PC ASSEMBLY #05732701 (Cont'd)

ITEM	REF	COMPONENT DESCRIPTION	MFR'S CODE	MANUFACTURER'S PART NUMBER	SD STOCK NUMBER	T/Q
	R31	Same as R20				
	R32	Same as R20				
	R33	RESISTOR, CC 39 k 5%, 1/4W	01121	CB3935	101561	1
	R34	RESISTOR, CC 4.7 k 5%, 1/4W	01121	CB4725	101598	1
	R35	RESISTOR, CC 1 M 5%, 1/4W	01121	CB1055	101605	1
	R36	RESISTOR, CC 2.2 k 5%, 1/4W	01121	CB2225	101562	1
	R37	RESISTOR, Selected in Test				1
	R38	Same as R10				
	R39	Same as R29				
	TP1	TEST POINT, White	91506	8041-1G9	100529	1
	U1	INTEGRATED CIRCUIT, ECL	04713	MC12040L	045277	1
	U2	INTEGRATED CIRCUIT Operational Amplifier	27014	LM301AH	025745	1
	U3	INTEGRATED CIRCUIT, ECL MSI 2-5 Counter	04713	MC10138P	103837	1
	U4	INTEGRATED CIRCUIT Operational Amplifier	02735	CA3130T	103231	1
	Y1	CRYSTAL, 100 MHz	00136	QUOTE #1344	053535	1
		OVEN, Comp P/O Y1	12020	TO-5P-9	102874	1

REPLACEABLE PARTS LIST

TITLE A22, IF PHASE DETECTOR ASSEMBLY #055058

ITEM	REF	COMPONENT DESCRIPTION	MFR'S CODE	MANUFACTURER'S PART NUMBER	SD STOCK NUMBER	T/O
1	A22A21	ASSEMBLY, PC 11-21 IF	52542	05504101	05504101	1
4		PLATE, Top	52542	055051	055051	2
5		PLATE, Right Side	52542	055050	055050	1
6	PL	PLATE, Left Side	52542	055049	055049	1
7		PLATE, Right End	52542	055048	055048	1
8		PLATE, Left End	52542	055047	055047	1
10		CAPACITOR, Feedthru 2300 pF +50-20%, 500V	71590	FT2300	100302	3
11	J1-J4	RECEPTICAL, RF SMB Jace	98291	51-045-0000	103362	4
12		CAPACITOR, Feedthru 1500 pF, 100V	72982	1250-003	103073	1
13		LUG, Solder #4	83330	1416-4	100509	2
14		SCREW, PHMS 4-40 x 3/16	96906	MS51957-12	10062603	2
15		SCREW, PHMS 4-40 x 5/16	96906	MS24693-C2	10072005	28
16		GASKET, RFI/EMI	07700	20-41210	103274	A/R
17		WIRE, #22				A/R
18		SCREW, PHMS 4-40 x 1/2	96906	MS51957-13	10062604	8
19		WASHER, Split Lock #4	96906	MS35388-135	100711	8

REPLACEABLE PARTS LIST

TITLE A22A1, 11-21 MHz IF BOARD PC ASSEMBLY #05504101

ITEM	REF	COMPONENT DESCRIPTION	MFR'S CODE	MANUFACTURER'S PART NUMBER	SD STOCK NUMBER	T/O
		PC BOARD	52542	055041	055041	1
	C1	CAPACITOR, Ceramic 1000 pF 20%, 50V	71590	CW15C102M	100251	6
	C2	CAPACITOR, Mica 33 pF 5%, 500V	72136	DM15ED330JO	10017501	1
	C3	Same as C1				
	C4	CAPACITOR, Ceramic 1 µF 20%, 50V	56289	5CZ5U105X0050C5	100176	6
	C5	Same as C4				
	C6	Same as C1				
	C7	Same as C1				
	C8	Same as C1				
	C9	Same as C1				
	C10	CAPACITOR, Ceramic .1 µF 20%, 50V	56289	5C023104X0500C5	100178	5
	C11	CAPACITOR, Mica 470 pF 5%, 300V	00853	RR06347	106370	1
	C12	CAPACITOR, Feedthru 1000 pF +20%, 500V	72982	2404000X5V0102P	106494	5
	C13	Same as C12				
	C14	Same as C12				
	C15	CAPACITOR, Tant 2.2 µF 10%, 20V	56289	150D225X9020A2	100203	1
	C16	Same as C10				
	C17	Same as C4				
	C18	Same as C10				
	C19	Same as C4				
	C20	Same as C12				
	C21	Same as C4				
	C22	Not Used				
	C23	Not Used				
	C24	Same as C10				
	C25	Not Used				
	C26	Not Used				

TITLE A22A1, 11-21 MHz IF BOARD PC ASSEMBLY #05504101 (Cont'd)

ITEM	REF	COMPONENT DESCRIPTION	MFR'S CODE	MANUFACTURER'S PART NUMBER	SD STOCK NUMBER	T/Q
	C27	Same as C10				
	C28	CAPACITOR, Mica 150 pF 5%, 500V	72136	DM15FD151JO	10021901	1
	C29	CAPACITOR, Ceramic 1000 pF 20%, 1 kV	91418	TYPE B	100076	2
	C30	CAPACITOR, Ceramic .01 µF +80-20%, 100V	91418	TA110	100103	1
	C31	Same as C4				
	C32	CAPACITOR, Mica 560 pF 5%, 300V	72136	DM15FC561JO	10022201	1
	C33	Same as C12				
	C34	Same as C29				
	CR1	DIODE, Signal 50V	03508	1N4151	100385	2
	CR2	Same as CR1				
	L1	INDUCTOR, Fixed 100 µH 5%	72259	WEE-100	101306	4
	L2	INDUCTOR, Fixed 2.7 µH 10%	72259	WEE-2.7	101299	6
	L3	Same as L2				
	L4	Same as L2				
	L5	Same as L2				
	L6	Same as L2				
	L7	Same as L2				
	L8	Same as L1				
	L9	Same as L1				
	L10	Same as L1				
	Q1	TRANSISTOR, SINPN	04713	2N3904	101377	2
	Q2	Same as Q1				
	Q3	TRANSISTOR, SINPN	07293	PN4275-18	102716	2
	Q4	Same as Q3				
	R1	RESISTOR, CC 100 Ω 5%, 1/8W	01121	BB1015	101701	2
	R2	RESISTOR, CC 27 Ω 5%, 1/8W	01121	BB2705	101810	1

TITLE A22A1, 11-21 MHz IF BOARD PC ASSEMBLY #05504101 (Cont'd)

ITEM	REF	COMPONENT DESCRIPTION	MFR'S CODE	MANUFACTURER'S PART NUMBER	SD STOCK NUMBER	T/O
	R3	Same as R1				
	R4	RESISTOR, CC 68 Ω 5%, 1/8W	01121	BB6805	101700	2
	R5	RESISTOR, CC 270 Ω 5%, 1/8W	01121	BB2715	101703	3
	R6	Same as R4				
	R7	RESISTOR, CC 390 Ω 5%, 1/8W	01121	BB3915	101708	1
	R8	RESISTOR, CC 47 Ω 5%, 1/4W	01121	CB4705	101560	1
	R9	Not Used				
	R10	RESISTOR, CC 560 Ω 5%, 1/8W	01121	BB5615	101710	1
	R11	RESISTOR, CC 10 Ω 5%, 1/8W	01121	BB1005	101834	3
	R12	RESISTOR, CC 680 Ω 5%, 1/8W	01121	BB6815	101972	1
	R13	RESISTOR, CC 220 Ω 5%, 1/4W	01121	CB2215	101566	1
	R14	RESISTOR, CC 22 Ω 5%, 1/8W	01121	BB2205	101706	2
	R15	Same as R11				
	R16	Same as R11				
	R17	RESISTOR, CC 2.2 k 5%, 1/8W	01121	BB2225	101719	6
	R18	Same as R17				
	R19	RESISTOR, CC 470 Ω 5%, 1/4W	01121	CB4715	101625	2
	R20	Same as R14				
	R21	RESISTOR, CC 18 k 5%, 1/8W	01121	BB1835	101699	1
	R22	RESISTOR, CC 3.3 k 5%, 1/8W	01121	BB3325	101713	1
	R23	RESISTOR, CC 680 Ω 5%, 1/4W	01121	CB6815	101669	1
	R24	RESISTOR, CC 1 k 5%, 1/4W	01121	CB1025	101569	1

TITLE A22A1, 11-21 MHz IF BOARD PC ASSEMBLY #05504101 (Cont'd)

ITEM	REF	COMPONENT DESCRIPTION	MFR'S CODE	MANUFACTURER'S PART NUMBER	SD STOCK NUMBER	T/Q
	R25	Same as R17				
	R26	Same as R17				
	R27	Same as R17				
	R28	Same as R17				
	R29	Same as R5				
	R30	Not Used				
	R31	Same as R5				
	R32	Not Used				
	R33	Not Used				
	R34	RESISTOR, CC 3.9 k 5%, 1/8W	01121	BB3925	101714	1
	R35	RESISTOR, CC 56 Ω 5%, 1/8W	01121	BB5605	101816	1
	R36	RESISTOR, CC 10 k 5%, 1/8W	01121	BB1035	101697	1
	R37	Same as R19				
		GUARD, Circuit Side	52542	055062	055062	1
		GUARD, Component Side	52542	055063	055063	1

REPLACEABLE PARTS LIST

TITLE		A23, OUTPUT SUM OSCILLATOR ASSEMBLY #055065				
ITEM	REF	COMPONENT DESCRIPTION	MFR'S CODE	MANUFACTURER'S PART NUMBER	SD STOCK NUMBER	T/Q
1	A23A1	ASSEMBLY, Osc. Buffer PC	52542	05524701	05524701	1
2		PLATE, Rear End	52542	055053	055053	1
3		PLATE, End Front	52542	055054	055054	1
4		PLATE, Side	52542	055055	055055	2
5		COVER	52542	055056	055056	2
6		RECEPTICAL, RF SMB Jack	98291	51-045-0000	103362	3
7		FILTER, RFI	33095	51-353-005	103284	2
8		SCREW, FHMS 4-40 x 5/16	96906	MS24693-C2	10072005	4
9		SCREW, FHMS 4-40 x 3/16	96906	MS24639-C1	10072003	24
10		SCREW, Set 4-40 x 1/8	08547	By Description	100620	4
11		SCREW, PHMS 4-40 x 5/16	96906	MS51957-4	10062505	4
12		WASHER, Split Lock #4	96906	MS35388-135	100711	4
13		SCREW, PHMS 4-40 x 3/16	96906	MS51957-2	10062503	1
14		LUG, Solder #4	83330	1416-4	100509	1

REPLACEABLE PARTS LIST

TITLE	A23A1, OSCILLATOR BUFFER BOARD PC ASSEMBLY #05524701					
ITEM	REF	COMPONENT DESCRIPTION	MFR'S CODE	MANUFACTURER'S PART NUMBER	SD STOCK NUMBER	T/Q
		PC BOARD	52542	055247	055247	1
	C1	CAPACITOR, Ceramic .01 µF +80-20%, 100V	91418	TA110	100103	9
	C2	Not Used				
	C3	CAPACITOR, CERAMIC 1 µF 20%, 50V	56289	5CZ5U105X0050C5	100176	1
	C4	Same as C1				
	C5	CAPACITOR, Ceramic 1000 pF 20%, 1 kV	91418	TYPE B	100076	1
	C6	Same as C1				
	C7	CAPACITOR, Mica 47 pF 5%, 500V	72136	DM15ED470JO	100171	1
	C8	CAPACITOR, Mica 82 pF 5%, 500V	72136	DM15ED820JO	100172	2
	C9	Same as C8				
	C10	Same as C1				
	C11	CAPACITOR, Mica 33 pF 5%, 500V	72136	DM15ED330JO	100175	1
	C12	Same as C1				
	C13	Same as C1				
	C14	Same as C1				
	C15	Not Used				
	C16	Same as C1				
	C17	Not Used				
	C18	Same as C1				
	CR1	DIODE, Signal 50V	03508	1N4151	100385	2
	CR2	Same as CR1				
	CR3	DIODE, Capacitor 250 pF	52542	KV1701	100452	2
	CR4	Same as CR3				
	L1	INDUCTOR, Fixed 470 µH 5%	72259	WEE-470	101297	1
	L2	Not Used				
	L3	INDUCTOR, Fixed 1000 µH 5%	72259	WEE-1000	101303	1

TITLE		A23A1, OSCILLATOR BUFFER BOARD PC ASSEMBLY #05524701 (Cont'd)				
ITEM	REF	COMPONENT DESCRIPTION	MFR'S CODE	MANUFACTURER'S PART NUMBER	SD STOCK NUMBER	T/Q
	L4	INDUCTOR, Variable	52542	05514302	05514302	1
	L5	INDUCTOR, Fixed 1 µH 10%	99880	1537-12	101312	1
	L6	INDUCTOR, Fixed 100 µH 10%	72259	WEE-WEE-100	101320	1
	Q1	TRANSISTOR, MOSFET Dual Gate N-Channel	04713	MFE121	101413	1
	Q2	TRANSISTOR, SINPN	02735	2N5179	101388	2
	Q3	Same as Q2				
	R1	RESISTOR, CC 1.2 k 5%, 1/8W	01121	BB1225	101969	5
	R2	RESISTOR, CC 120 Ω 5%, 1/8W	01121	BB1215	101970	1
	R3	RESISTOR, CC 620 Ω 5%, 1/8W	01121	BB6215	102497	1
	R4	RESISTOR, CC 47 k 5%, 1/8W	01121	BB4735	101694	1
	R5	RESISTOR, CC 68 k 5%, 1/8W	01121	BB6835	101822	1
	R6	RESISTOR, CC 100 k 5%, 1/8W	01121	BB1045	101976	1
	R7	RESISTOR, CC 220 Ω 5%, 1/8W	01121	BB2215	101798	1
	R8	Same as R1				
	R9	Same as R1				
	R10	RESISTOR, CC 270 Ω 5%, 1/8W	01121	BB2715	101703	2
	R11	RESISTOR, CC 47 Ω 5%, 1/8W	01121	BB4705	101707	2
	R12	RESISTOR, CC 12 Ω 5%, 1/8W	01121	BB1205	101819	2
	R13	RESISTOR, CC 100 Ω 5%, 1/8W	01121	BB1015	101701	1
	R14	Same as R1				
	R15	Same as R1				
	R16	Same as R10				

TITLE A23A1, OSCILLATOR BUFFER BOARD PC ASSEMBLY #05524701 (Cont'd)

ITEM	REF	COMPONENT DESCRIPTION	MFR'S CODE	MANUFACTURER'S PART NUMBER	SD STOCK NUMBER	T/Q
	R17	Not Used				
	R18	Same as R11				
	R19	Same as R12				
	R20	RESISTOR, CC 2.4 k 5%, 1/8W	01121	BB2425	101900	1
	R21	RESISTOR, CC 4.7 k 5%, 1/4W	01121	CB4725	101598	1

REPLACEABLE PARTS LIST

TITLE		A24, POWER SUPPLY BOARD PC ASSEMBLY #05595601				
ITEM	REF	COMPONENT DESCRIPTION	MFR'S CODE	MANUFACTURER'S PART NUMBER	SD STOCK NUMBER	T/Q
		PC BOARD	52542	055956	055956	1
	C1	CAPACITOR, EL AX 1100 µF +75-10%, 30V	56289	39D118GO30GP4	100255	3
	C2	Same as C1				
	C3	Same as C1				-
	C4	CAPACITOR, EL AX 1100 µF +75-10%, 50V	56289	39D118GO30GP4	100227	1
	C5	CAPACITOR, Tant 2.2 µF 10%, 35V	56289	150D225X9035B2	100100	3
	C6	Same as C5				
	C7	Same as C5				
	CR1 thru CR12	DIODE Rectifier 600V	04713	1N4005	100413	12
		ANCHOR, Cable	06383	TMIS4C	102747	4
		TIE, Cable	06383	SSTIM	100753	4
		NUT, Kep #4	78189	511-041800-00	100041	4
		SCREW, PHMS #4-40 x 5/15	96906	MS51957-4	10062605	4
		SPACER, Swage #6-32 x 1/4	88245	1530-B-1/4	100783	7
		TERMINAL, Swage	88245	1309B-1	100508	32
		WASHER, Flat #4	96906	MS15795-803	100703	4

REPLACEABLE PARTS LIST

TITLE		A25, OUTPUT ÷N OSCILLATOR ASSEMBLY #055256				
ITEM	REF	COMPONENT DESCRIPTION	MFR'S CODE	MANUFACTURER'S PART NUMBER	SD STOCK NUMBER	T/Q
1	A25A1	ASSEMBLY, Oscillator Buffer PC Board	52542	05524702	05524702	1
2		PLATE, End Rear	52542	055053	055053	1
3		PLATE, End Front	52542	055054	055054	1
4		PLATE, Side	52542	055055	055055	2
5		COVER	52542	055056	055056	2
6		RECEPTICAL, RF SMB Jack	98291	51-045-0000	103362	3
7		FILTER, RFI	33095	51-353-005	103284	2
8		SCREW, FHMS 4-40 x 5/16	96906	MS24693-C3	10072005	4
9		SCREW, FHMS 4-40 x 3/16	96906	MS24693-C1	10072003	24
10		SCREW, Set 4-40 x 1/8	08547	By Description	100620	4
11		SCREW, PHMS 4-40 x 5/16	96906	MS51957-4	10062505	4
12		WASHER, Split Lock #4	96906	MS35338-135	100711	4

REPLACEABLE PARTS LIST

TITLE		A25A1, OSCILLATOR BUFFER BOARD PC ASSEMBLY #05524702				
ITEM	REF	COMPONENT DESCRIPTION	MFR'S CODE	MANUFACTURER'S PART NUMBER	SD STOCK NUMBER	T/Q
		PC BOARD	52542	055347	055247	1
	C1	CAPACITOR, Ceramic .01 µF +80-20%, 100V	91418	TA110	100103	8
	C2	Not Used				
	C3	CAPACITOR, Ceramic 1 µF 20%, 50V	56289	5CZ5U105X0050C5	100176	1
	C4	CAPACITOR, Ceramic 2000 pF 10%, 500V	71590	CE-202	100060	1
	C5	CAPACITOR, Ceramic .001 µF 20%, 1 kV	91418	TYPE B	100076	1
	C6	Same as C1				
	C7	CAPACITOR, Mica 47 pF 5%, 500V	72136	DM15ED470JO	100171	1
	C8	CAPACITOR, Mica 82 pF 5%, 500V	72136	DM15ED820JO	100172	2
	C9	Same as C8				
	C10	Same as C1				
	C11	CAPACITOR, Mica 33 pF 5%, 500V	72136	DM15ED330JO	100175	2
	C12	Same as C1				
	C13	Same as C1				
	C14	Same as C1				
	C15	Same as C11				
	C16	Same as C1				
	C17	Not Used				
	C18	Same as C1				
	CR1	Not Used				
	CR2	Not Used				
	CR3	DIODE, Capacitor 250 pF	52542	KV1701	100452	2
	CR4	Same as CR3				
	L1	INDUCTOR, Fixed 470 µH 5%	72259	WEE-470	101297	1
	L2	Not Used				
	L3	Not Used				

TITLE A25A1, OSCILLATOR BUFFER BOARD PC ASSEMBLY #05524702 (Cont'd)

ITEM	REF	COMPONENT DESCRIPTION	MFR'S CODE	MANUFACTURER'S PART NUMBER	SD STOCK NUMBER	T/O
	L4	INDUCTOR, Variable	52542	05514302	05514302	1
	L5	INDUCTOR, Fixed 1 µH 10%	99800	1537-12	101312	1
	Q1	TRANSISTOR, MOSFET Dual Gate N-Channel	04713	MFE121	101413	1
	Q2	TRANSISTOR, SINPN	02735	2N5179	101388	2
	Q3	Same as Q2				
	R1	RESISTOR, CC 1.2 k 5%, 1/8W	01121	BB1225	101969	6
	R2	Same as R1				
	R3	RESISTOR, CC 620 Ω 5%, 1/8W	01121	BB6215	102497	1
	R4	RESISTOR, CC 47 k 5%, 1/8W	01121	BB4735	101694	1
	R5	RESISTOR, CC 68 k 5%, 1/8W	01121	BB6835	101822	1
	R6	RESISTOR, CC 100 k 5%, 1/8W	01121	BB1045	101976	1
	R7	RESISTOR, CC 220 Ω 5%, 1/8W	01121	BB2215	101798	3
	R8	Same as R1				
	R9	Same as R1				
	R10	RESISTOR, CC 270 Ω 5%, 1/8W	01121	BB2715	101703	2
	R11	RESISTOR, CC 47 Ω 5%, 1/8W	01121	BB4705	101707	2
	R12	RESISTOR, CC 12 Ω 5%, 1/8W	01121	BB1205	101819	2
	R13	Same as R7				
	R14	Same as R1				
	R15	Same as R1				
	R16	Same as R10				
	R17	Not Used				
	R18	Same as R11				
	R19	Same as R12				

TITLE	A25A1, OSCILLATOR BUFFER BOARD PC ASSEMBLY #05524702 (Cont'd)				
ITEM	REF	COMPONENT DESCRIPTION	MFR'S CODE	MANUFACTURER'S PART NUMBER	SD STOCK NUMBER	T/O
	R20	Same as R7				
	R21	RESISTOR, CC 4.7 k 5%, 1/8W	01121	BB4725	101792	1

MP MASTER
MA34028